9000 Mk2 transmitter

Pressure & hydrostatic level transmitter

Features

- Loop powered
- 4 to 20mA output
- Intrinsically safe option
- +/- 0.1% accuracy
- 10:1 rangeability
- Spans from 0.01 to 300 Bar
- Integral or remote calibration
- Absolute & Gauge pressure versions
- Good long-term stability
- Ceramic capacitive sensor
- Wide range of process connections
- Direct process mounting

CONTENTS

SECTION		PAGE
1	Data sheet	3
2	Installation	5
3	Wiring Diagrams	6
4	Series 9000 Calibration & Span adjustment	8
5	Fault finding	12
6	Order Codes & Illustrations	13
	PRODUCT ORDERING CODES	
Fig No. 1	Industrial Series 9000 1/2" NPT male to 1/4" NPT female Tx.	14
Fig No. 1	Marine Series 9000 1/2" NPT male to 1/4" NPT female Tx.	15
Fig No. 2	Industrial Series 9000 1/4" NPT male Tx	17
Fig No. 2	Marine Series 9000 1/4" NPT male Tx	18
Fig No. 3	Industrial Series 9000 G 1/2" A (1/2" BSPP) male Tx	20
Fig No. 3	Marine Series 9000 G 1/2" A (1/2" BSPP) male Tx	21
Fig No. 4	Industrial Series 9000 G 1-1/2" A (1-1/2" BSPP) male Tx.	23
Fig No. 4	Marine Series 9000 G 1-1/2" A (1-1/2" BSPP) male Tx.	24
Fig No. 5	Industrial Series 9000 1-1/2" TRI-Clamp Tx.	26
Fig No. 6	Industrial Series 9000 2" TRI-Clamp Tx.	28
Fig No. 7	Industrial 9000 1-1/2" IDF connector Tx.	30
Fig No. 8	Industrial Series 9000 2" IDF connector Tx.	32
Fig No. 9	Industrial Series 9000 1-1/2" RJT connector Tx.	34
Fig No. 10	Industrial Series 9000 2" RJT connector Tx.	36
Fig No. 11	Industrial Series 9000 Flanged external to vessel Tx.	40
Fig No. 11	Marine Series 9000 Flanged external to vessel Tx.	41
	LIST OF ILLUSTRATIONS	
F1444	Series 9000 1/2" NPT male and 1/4" NPT female Tx.	13
F1446	Series 9000 1/4" NPT male Tx.	16
F1445	Series 9000 G 1/2" A (1/2" BSPP) male Tx.	19
F1448	Series 9000 1-1/2" A (1-1/2" BSPP) male Tx.	22
F1554/55	Series 9000 1-1/2" and 2" TRI-Clamp Tx.	25 & 27
F1456/57	Series 9000 1-1/2" and 2" IDF connector Tx.	29 & 31
F1458/59	Series 9000 1-1/2" and 2" RJT connector Tx.	33 & 35
F1447	Series 9000 flanged mounted Tx (FIXED FLANGE)	37
F1450	Series 9000 flanged mounted Tx (1" ANSI)	38
F1449	Series 9000 flanged mounted Tx (DN25 PN40)	39

SPECIFICATION

Functional

Process fluid: Output signal: Power supply: Load resistance: Measuring range: Overrange limit:	Liquid, gas & vapour Two-wire, 4-20mA 10-30 Vdc R = 50 x (supply voltage - 10v)Ω 0.01 to +300 bar See ordering information	Span adjustment: Process temp. limits: Ambient temp. limits: Humidity limits: Hazardous area certification:	10% to 100% of URL* See ordering information -20°C to +90°C (+80°C EEx ia) 0 to 100% RH ATEX II 1 G and ATEX II 1 D EEx ia IIB T4 (Ta = -30°C to +80°C)

* 20% to 100% on 0.1 bar and 0.2 bar ranges

Performance

Accuracy: Stability: Temperature effect:	+/- 0.1%• of calibrated span including linearity, hysteresis and repeatability +/- 0.1% URL* per 6 months +/- 0.015% URL* per °C (over ambient temperature range)

•All nominal ranges except 300 bar, which is +/- 0.5%
* URL = Upper Range Limit (Maximum span)

Physical

Electrical connection: Process connection: Wetted Parts: Sensor Process conn: Face seal ring:	M20 cable gland for cable O.D. 5 to 9mm See ordering information Ceramic 316 St Steel, aluminium Bronze or Titanium Fluorocarbon (FPMFKM), Buna N, EPD Chemraz®#	Non-wetted parts: Housing: Body 'O' rings: Humidity limits: Ingress protection: Approximate weight:	 316 St Steel or Aluminium Bronze Fluorocarbon (FPM/ FKM) or Buna 0 to 100% IP67 1 Kg (threaded version)

EPDM and Chemraz® only available on industrial versions.
Chemraz® is a registered trademark of Green Tweed

N.B.For process temperatures above 90°c, temperature barrier must be specified.

mobrey

EC Declaration of Conformity

No: 96

Mobrey Ltd

158 Edinburgh Avenue, Slough, Berkshire, SL1 4UE, United Kingdom

(Tel:+44(0)1753 756600, Fax:+44(0)1753 823589)

Declares under our sole responsibility that the product(s):

Equipment: **Pressure/Level Transmitter**

Type Numbers: **9000 ****1****, 9000M****1****, 97** *****1***, 97**M*****1*****

(Minor variations in design to suit the application and/or mounting requirements are identified by alpha/numeric characters where indicated * above)

Conform to the relevant provisions of the European Directives:

89/336/EEC	Electromagnetic Compatibility	**92/31/EEC**	Amending 89/336/EEC
94/09/EC	ATEX	**97/23/EC**	Pressure Equipment

Conformity Assessment Procedure followed for 97/23/EC (>200 Bar) **A**

Inspection carried out by:

for 94/09/EC:

SIRA Certification Service (0518)
South Hill, Chislehurst,
Kent, BR7 5EH , GB

EC Type/Design Examination Certificate to 94/09/EC **SIRA 00ATEX2193X**

Quality Assurance System monitored by:

For 94/09/EC
SIRA Certification Service (0518)
South Hill, Chislehurst,
Kent, BR7 5EH , GB

The following Harmonised Standards have been applied:

EN 50014:1997 +A1+A2	**EN 50020:1994**	**EN 50284:1999**
EN 50281-1-1:1998	**EN 61326:1997 +A1+A2**	

Authorised Signatory for the manufacturer within the European Community:

Signed: Date: 12/4/06

David J. Ross-Hamilton, Global Approvals Consultant

SECTION 2 : INSTALLATION

2.1 CARE OF THE SENSOR

The ceramic capacitive sensor is extremely rugged, however, care should be taken to avoid physical impact of solid objects onto the sensor face.

2.2 The transmitter should be installed with the breather below horizontal and using the correct diameter of cable connected a shown in Section 3. The cable gland and screwed cover when replaced should be tightened fully to ensure sealing.

2.3 The 9000's electronics allow simple re-ranging of the instrument. Zero and Span adjustment potentiometers can be accessed by removal of the screwed cover.

Transmitters are normally supplied pre-calibrated to user requirements, if re-ranging of the 9000 is required see Section 4. For connection diagrams see Section 3.

2.4 All 9000 Series units should be installed well away from tank inlets, pumps and areas of turbulence or pressure surges, as these can cause errors or even damage the sensor.

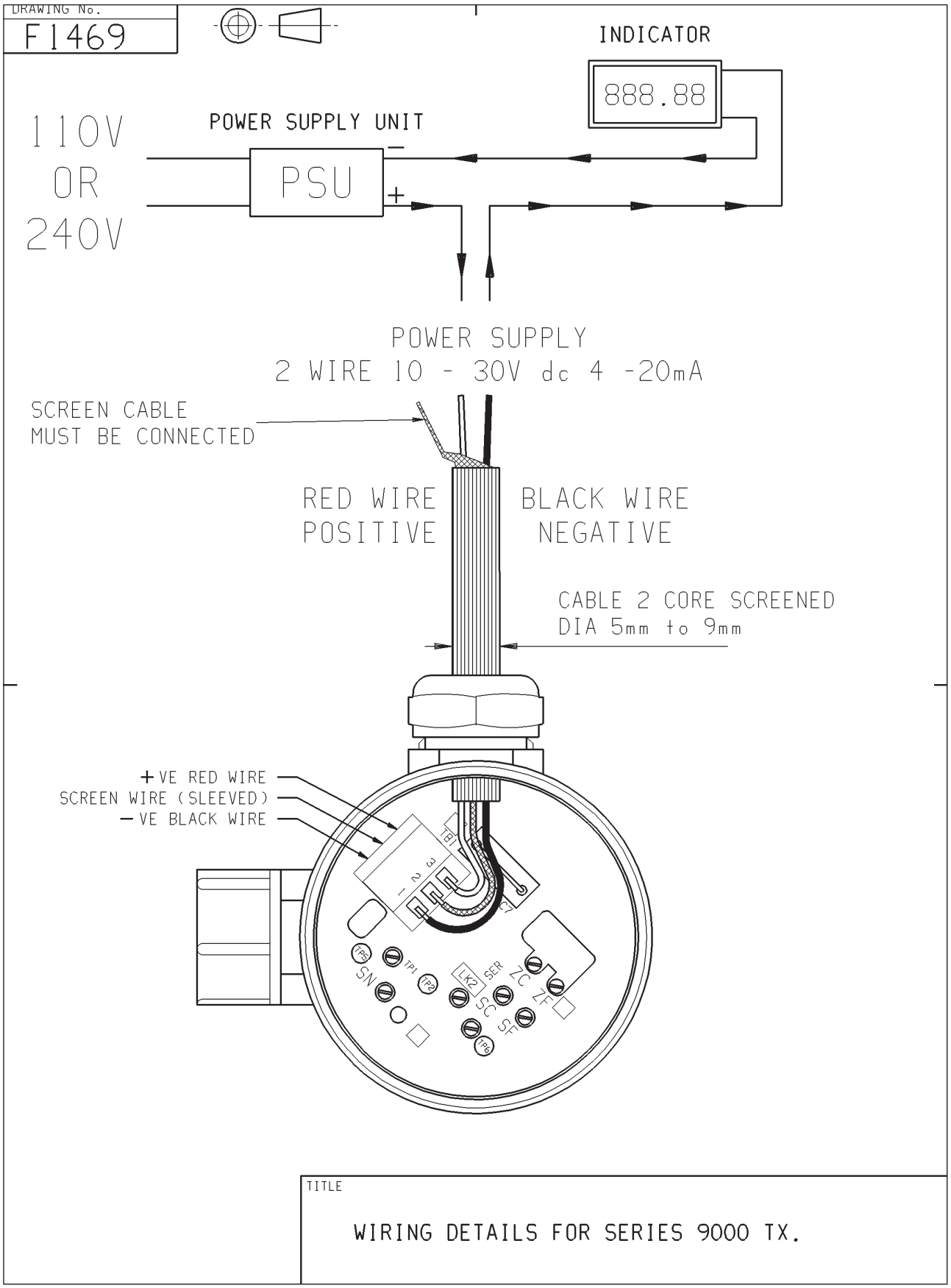
DRAWING No.
F1469
INDICATOR
888.88
110V
OR
240V
POWER SUPPLY UNIT
PSU
POWER SUPPLY
2 WIRE 10 - 30V dc 4 -20mA
SCREEN CABLE
MUST BE CONNECTED
RED WIRE
POSITIVE
BLACK WIRE
NEGATIVE
CABLE 2 CORE SCREENED
DIA 5mm to 9mm
+VE RED WIRE
SCREEN WIRE (SLEEVED)
−VE BLACK WIRE
TB1
3
2
1
CT
TP3
SN
TP1
TP2
LK2
SER
ZC
ZF
SC
ST
TP6
TITLE
WIRING DETAILS FOR SERIES 9000 TX.

DRAWING No.

71097/936

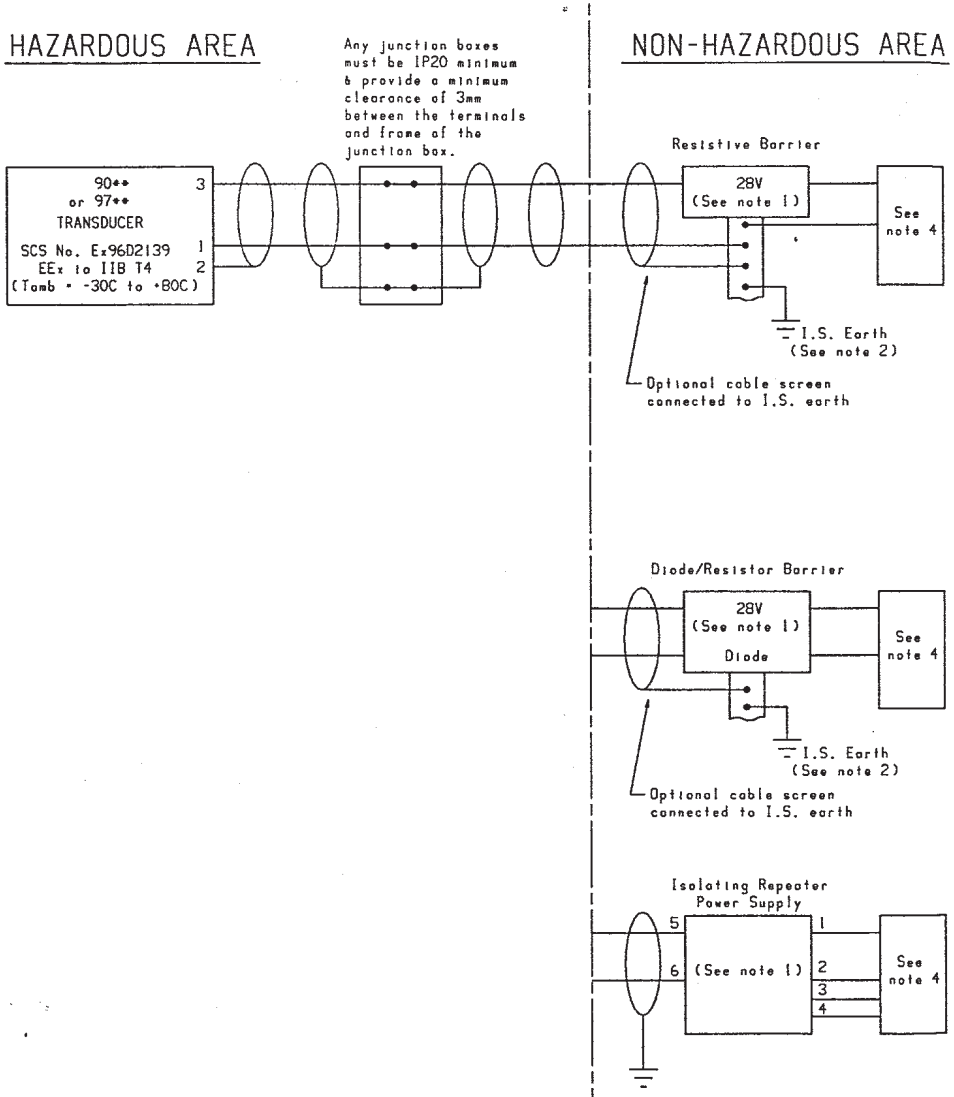

1. The following are permitted:

   a). Any single channel positive polarity 28V 300ohm shunt zener diode barrier and/or a diode return barrier, each certified [EEx ia]IIB or better by an EEC registered test house. The allowable external capacitance (Co) and inductance (Io) must equal or exceed 0.47uF and 12.6mH for group IIB. eg STAHL type Nos.

   9002/13-280-093-00 and/or 9002/34-280-000-00

   The maximum capacitance and maximum inductance of the hazardous cables shall not exceed the values shown below in TABLE 1.

   TABLE 1.

GROUP	CAPACITANCE	INDUCTANCE
IIA AND IIB	92.0nF	11.34mH

   b). A single channel positive polarity 28V 300ohm shunt zener diode barrier and/or a diode return barrier
   BASEEFA Certificate No. Ex 832452
   or
   One type MTL3046 or MTL3046B Repeater Power Supply
   BASEEFA Certificate No Ex 89C2112
   (Terminal 8 is unused).

   The maximum capacitance and maximum inductance shall not exceed the values stated below, shown in TABLE 2.

   TABLE 2.

GROUP	CAPACITANCE	INDUCTANCE
IIB	272nF	11.34mH
IIA	1.87uF	32.34mH

   The values of the cable parameters given in TABLE 2 are contrary to the values given in BASEEFA certificate numbers Ex 832452 and Ex 89C2112 and SCS will take responsibility for these differences.

2. Barrier earthing arrangements and installation must comply with the installation requirements of the country of use. e.g. in the UK. BS5345:part 4:1977

3. Cable may be screened or unscreened.

4. Non-hazardous area apparatus unspecified except that it must not be supplied from nor contain under normal or abnormal conditions a source of potential with respect to eart in excess of 250V rms or 250V d.c.

SECTION 4 : SERIES 9000 CALIBRATION & SPAN ADJUSTMENT

NOTE : All 9700 Series Units are generally supplied pre-calibrated and ranged specifically for the application details supplied with the order.

Should re-ranging or re-calibrtion of the Series 9000 pressure and level transmitters be necessary the following procedure should be followed :

4.1. Calibration Connection diagram

4.1.1 Connect transmitter to the multimeter as shown below :

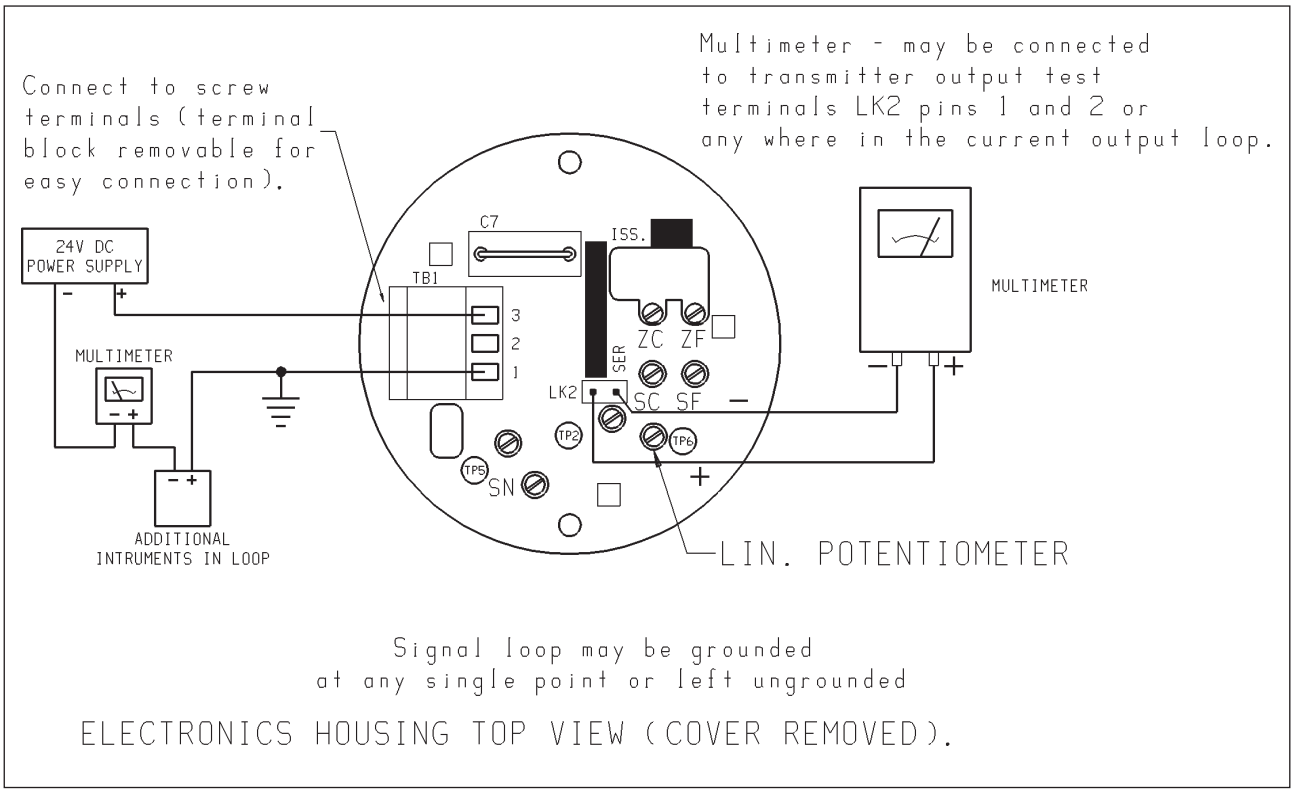

Figure 1.

4.2 RE-RANGING TRANSMITTER

4.2.1 Verify sensor range from range code shown on sensor body.

4.2.2 Connect 24v dc to transmitter. (10 to 30V)

4.2.3 Connect a multimeter between the power supply and the transmitter or to link 2 as shown in fig. 1 on previous page.

4.2.4 With 0% pressure / level applied, turn potentiometer “ZC” (coarse zero adjustment) until multimeter reads approximately 4mA.

4.2.5 Turn potentiometer “ZF” (fine zero adjustment) until multimeter reads 4.000mA +/- 0.005mA

4.2.6 With 100% pressure / level applied, turn potentiometer “SC” (coarse span adjustment) until multimeter reads approximately 20mA.

4.2.7 Turn potentiometer “SF” (fine span adjustment) until multimeter reads 20.000mA +/-0.005mA

4.2.8 Return pressure / level to 0%, multimeter should now read 4.000mA +/- 0.005mA.

4.2.9 The transmitter is now calibrated and ready for service.

4.3 ZERO OFFSET

4.3.1 For an offset zero (i.e.) lower range pressures between 20% of span below atmospheric pressure and 40% of span above atmospheric pressure it is recommended that the transmitter span is first set as in section 4.2.

4.3.2 The zero offset required can now be introduced by using ZC and ZF.
This prevents zero / span interaction when the sensor is “off null”.

4.4 SENSOR NULL

4.4.1 The sensor null is normally factory set, if the electronics have been changed, the sensor null (SN) will require adjustment.

4.4.2 Connect multimeter between TP1 and TP2 using 1mm test pins.

4.4.3 Set multimeter to millivolt range.

4.4.4 Ensure transmitter is isolated from the process and at zero pressure.

4.4.5 Turn potentiometer “SN” until multimeter reads 0.00 millivolts, disconnect multimeter, zero and span may now be set as detailed in section 1.2.

NOTE:

This is normally factory set and sensor null potentiometer will be sealed.
ON NO ACCOUNT MUST THE SEAL BE BROKEN.
Only on replacement boards will this potentiometer not be sealed.
In this event, the potentiometer should be sealed once adjustment has been made.

4.5 LINEARISATION PROCEDURE

4.5.1 This is normally factory set and the potentiometer sealed.
ON NO ACCOUNT MUST THE SEAL BE BROKEN.

4.5.2 If the electronics have been changed linearisation may be required and on replacement electronic assemblies only will the linearisation potentiometer not be sealed.

4.5.3. In this case having carried out the sensor nulling procedure first re-range the transmitter to its nominal range as detailed in section 4.2 before checking the output at 50% of span.

4.5.4 If the output is outside 12.000mA +/- 0.012mA adjust the LIN (next to TP6) until the error is trebled e.g. for an output of 12.025mA the error is + 0.025mA. Therefore, using the LIN potentiometer set the output to 12.075mA .

4.5.5 The linearisation potentiometer should now be sealed.

4.5.6 If the linearity adjustment was necessary repeat section 4.2.

4.6 SENSOR RESPONSE TIME

4.6.1 The sensor damping can be adjusted via link 1 as shown below.

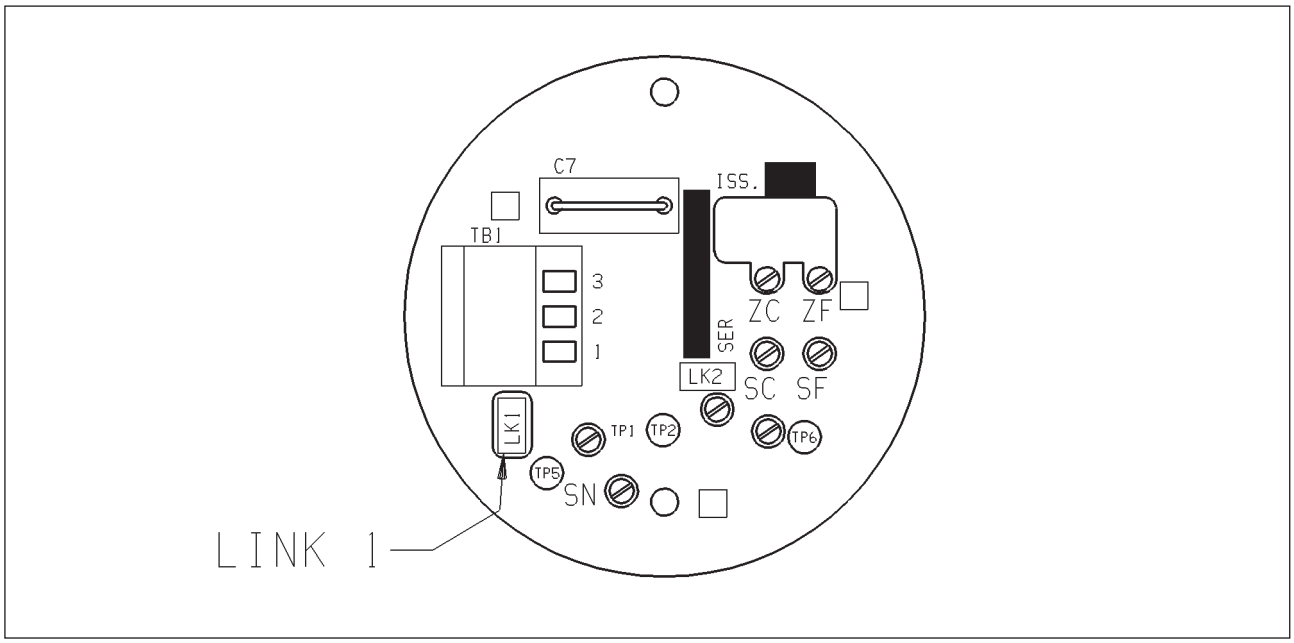

Electronics housing top view (cover removed)

4.6.2 With link 1 present the response time is approximately 60mS for a 63% response to pressure change and 150mS for a 90% response to pressure change.

4.6.3 With link 1 removed the response times become approximately 10mS for a 63% response to pressure change and 90mS for a 90% response to pressure change.

Units are supplied with link 1 fitted.

SECTION 5 : FAULT FINDING

5.1 The following is a guide to simple fault finding.

5.1.1

LIGHTING

HIGH mA OUTPUT
NO CHANGE IN OUTPUT WITH PRESSURE CHANGE.

REMEDY : Return to factory.
Fit new main circuit board and recalibrate as in Section 4.

5.1.2

MOISTURE CONDENSATION

FLUCTUATING OUTPUT, CHANGING IN
STEADY SIGNAL OUTPUT APPROX. 4 mA
NO CHANGE IN OUTPUT WITH PRESSURE CHANGE.

REMEDY : Remove the transmitter to a dry area and allow it to fully dry out. Once re-installed, check all glands and lid are tight. Condensation in the housing may indicate that the temperature barrier should be fitted (see ordering information).

5.1.3

DAMAGED SENSOR

HIGH mA OUTPUT (VOLTAGE OUTPUT SENSOR)
APPROX. > 10mA. NO CHANGE IN OUTPUT WITH
PRESSURE CHANGE.

REMEDY : Return to factory. Replace sensor

5.2 Replacing Main Circuit Board Assembly

For Series 9000 the main circuit board assembly may be replaced by removing the threaded housing cap plus the cable and vent glands and the two circuit board retaining screws. Remove the PCB assembly, and disconnect the connector from the rear of the board. Refit new PCB in reverse order. Set-up and calibrate as per procedure detailed in Section 4 “SERIES 9000 CALIBRATION”

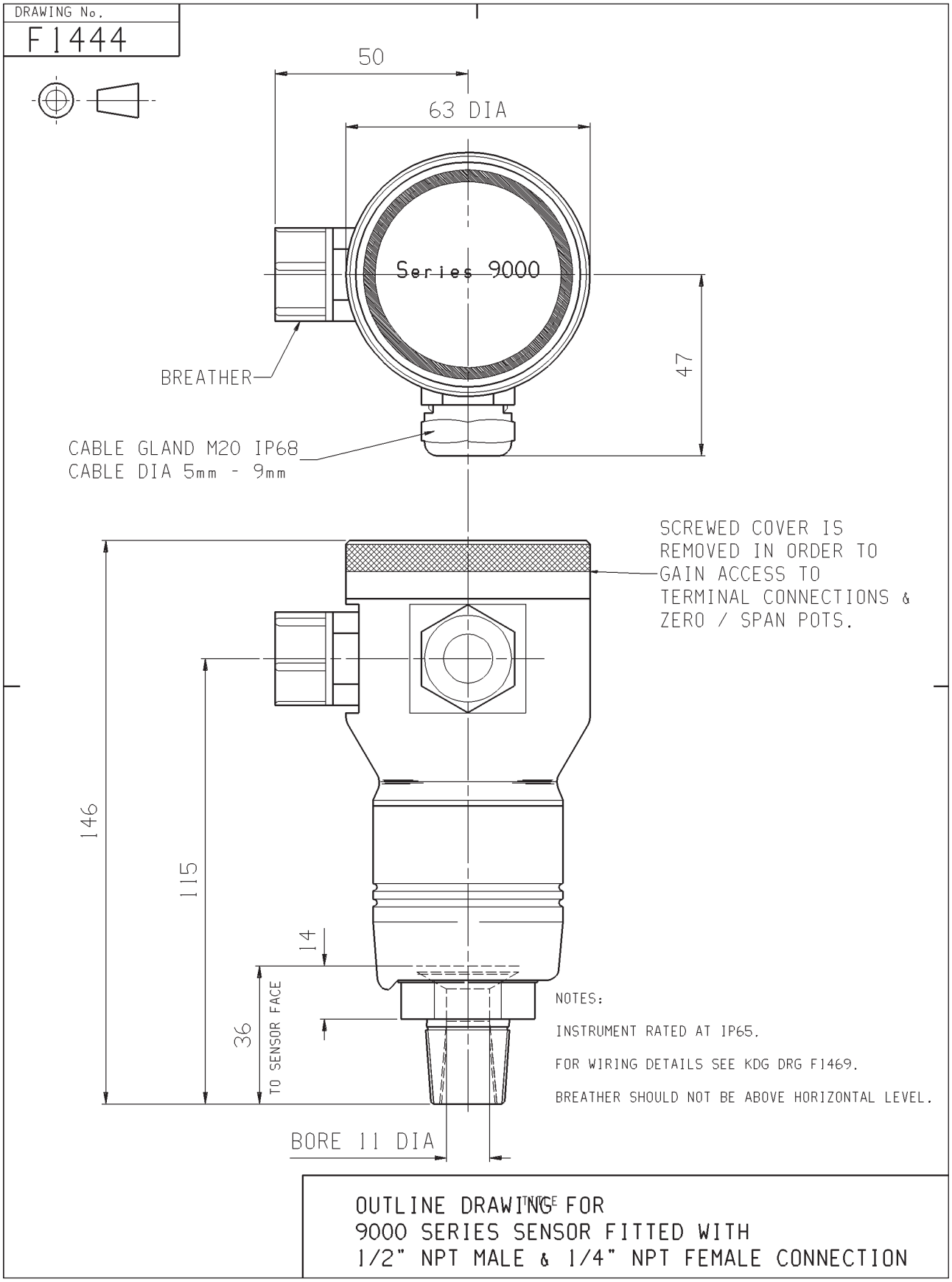
DRAWING No.
F1444
50
63 DIA
Series 9000
47
BREATHER
CABLE GLAND M20 IP68
CABLE DIA 5mm - 9mm
SCREWED COVER IS REMOVED IN ORDER TO GAIN ACCESS TO TERMINAL CONNECTIONS & ZERO / SPAN POTS.
146
115
14
36
TO SENSOR FACE
NOTES:
INSTRUMENT RATED AT IP65.
FOR WIRING DETAILS SEE KDG DRG F1469.
BREATHER SHOULD NOT BE ABOVE HORIZONTAL LEVEL.
BORE 11 DIA
OUTLINE DRAWING FOR
9000 SERIES SENSOR FITTED WITH
1/2" NPT MALE & 1/4" NPT FEMALE CONNECTION

9000	S				AB	1	

ELECTRONICS ENCLOSURE AND PROCESS CONNECTION MATERIAL	CODE
ST. STEEL 316 S31	S

O RING MATERIIAL	CODE
VITON	1
BUNA–N	2
KALREZ	3
EPDM	4

SALES TO STATE PROCESS FLUID & TEMPERATURE BELOW

GAUGE NOMINAL PRESSURE	MAX OVER PRESSURE	CODE
0.01 – 0.1 BAR	0 – 0.5 BAR	GB
0.02 – 0.2 BAR	0 – 1 BAR	GC
0.05 – 0.5 BAR	0 – 2.5 BAR	GD
0.1 – 1.0 BAR	0 – 5 BAR	GE
0.2 – 2.0 BAR	0 – 10 BAR	GF
0.5 – 5.0 BAR	0 – 25 BAR	GG
1.0 – 10 BAR	0 – 30 BAR	GH
2.0 – 20 BAR	0 – 60 BAR	GJ
7 – 70 BAR	0 – 105 BAR	GK
30– 300 BAR	0 – 400 BAR	GL

ABSOLUTE NOMINAL PRESSURE	MAX OVER PRESSURE	CODE
0 – 0.2 BAR	1 BAR A	AB
0 – 0.5 BAR	2.5 BAR A	AC
0 – 1.0 BAR	5 BAR A	AD
0 – 2.0 BAR	10 BAR A	AE
0 – 5.0 BAR	25 BAR A	AF
0 – 10 BAR	30 BAR A	AG
0 – 20 BAR	60 BAR A	AH
0 – 70 BAR	105 BAR A	AJ
0 – 300 BAR	400 BAR A	AK

APPROVAL	CODE
NON CERT	0
I.S.	1

PROCESS CONNECTION	CODE
1/2" NPT MALE / 1/4" NPT FEMALE	AB

PROCESS CONNECTION MATERIAL	CODE
ST.STL 316 S31	1

TEMPERATURE BARRIER	CODE
NO	X
YES	A

NOTE:-
KALREZ and E.P.D.M. 'O' rings are fitted to the wetted end of sensor only. Other 'O' rings fitted are BUNA 'N'

STATE CALIBRATION TO NON STANDARD RANGE	

ORDER CODES FOR
1/2" NPT MALE - 1/4" NPT FEMALE INDUSTRIAL VERSION

9000M [ ] [ ] [ ] [ ] **AB** **1** **X**

ELECTRONICS ENCLOSURE MATERIAL	CODE
ST. STEEL 316 S31	S
ALUMINIUM BRONZE	A

O RING MATERIIAL	CODE
VITON	1
BUNA–N	2

SALES TO STATE PROCESS FLUID & TEMPERATURE BELOW

GAUGE NOMINAL PRESSURE	MAX OVER PRESSURE	CODE
0.02 – 0.2 BAR	0 – 1 BAR	GC
0.05 – 0.5 BAR	0 – 2.5 BAR	GD
0.1 – 1.0 BAR	0 – 5 BAR	GE
0.2 – 2.0 BAR	0 – 10 BAR	GF
0.5 – 5.0 BAR	0 – 25 BAR	GG
1.0 – 10 BAR	0 – 30 BAR	GH
2.0 – 20 BAR	0 – 60 BAR	GJ

APPROVAL	CODE
NON CERT	0
I.S.	1

PROCESS CONNECTION	CODE
1/2" NPT MALE / 1/4" NPT FEMALE	AB

PROCESS CONNECTION MATERIAL	CODE
ST.STL 316 S31	1
ALUMINIUM BRONZE	3
TITANIUM WETTED PART ONLY ST.STLEEL 316L	4

TEMPERATURE BARRIER	CODE
NO	X

STATE CALIBRATION TO NON STANDARD RANGE	

ORDER CODES FOR
1/2" NPT MALE - 1/4" NPT FEMALE MARINE VERSION

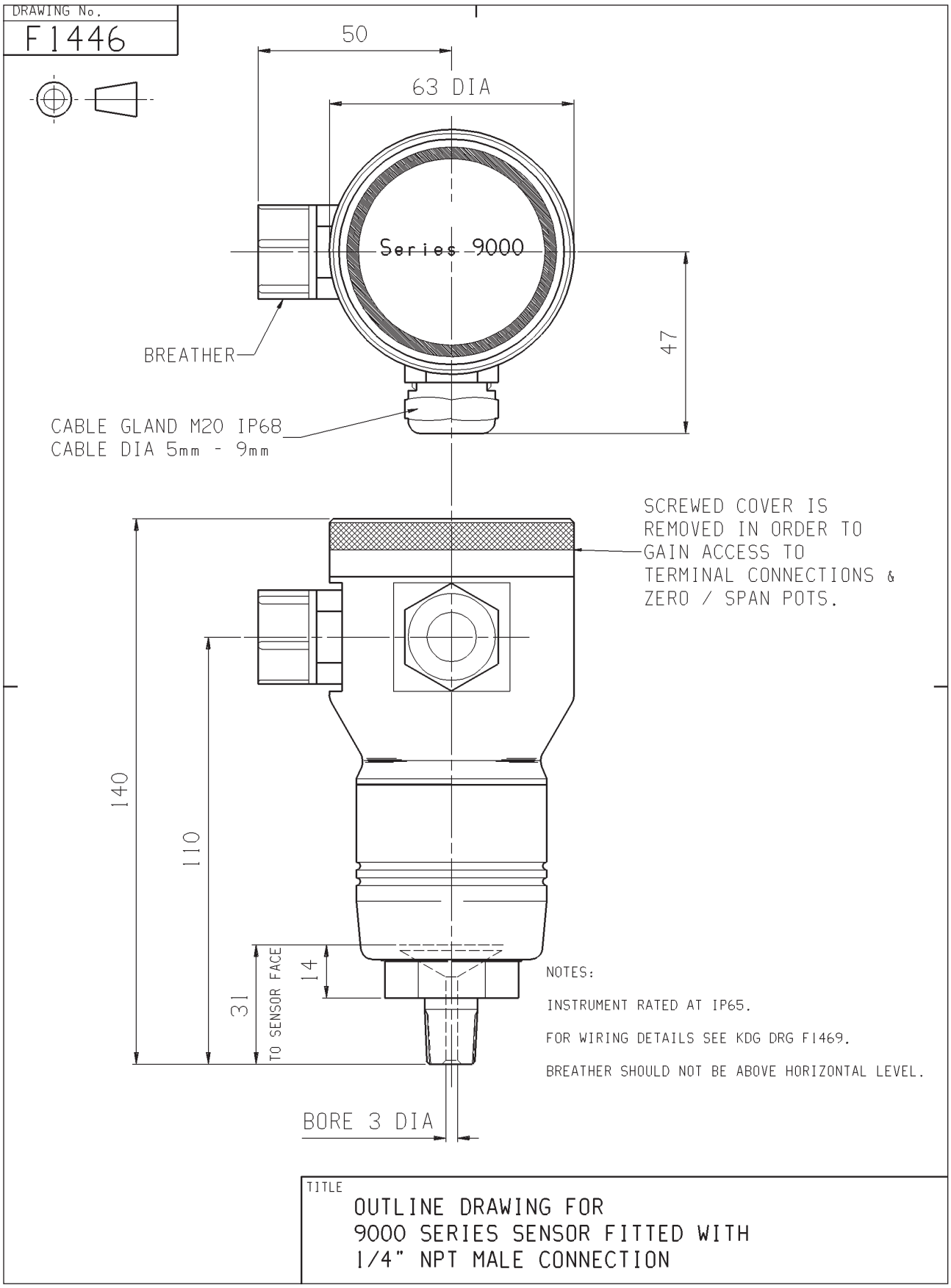
DRAWING No.
F1446
50
63 DIA
Series 9000
BREATHER
47
CABLE GLAND M20 IP68
CABLE DIA 5mm - 9mm
SCREWED COVER IS
REMOVED IN ORDER TO
GAIN ACCESS TO
TERMINAL CONNECTIONS &
ZERO / SPAN POTS.
140
110
31
TO SENSOR FACE
14
NOTES:
INSTRUMENT RATED AT IP65.
FOR WIRING DETAILS SEE KDG DRG F1469.
BREATHER SHOULD NOT BE ABOVE HORIZONTAL LEVEL.
BORE 3 DIA
TITLE
OUTLINE DRAWING FOR
9000 SERIES SENSOR FITTED WITH
1/4" NPT MALE CONNECTION

9000	S				AC	1	

ELECTRONICS ENCLOSURE AND PROCESS CONNECTION MATERIAL	CODE
ST. STEEL 316 S31	S

O RING MATERIIAL	CODE
VITON	1
BUNA–N	2
KALREZ	3
EPDM	4

SALES TO STATE PROCESS FLUID & TEMPERATURE BELOW	

GAUGE NOMINAL PRESSURE	MAX OVER PRESSURE	CODE
0.01 – 0.1 BAR	0 – 0.5 BAR	GB
0.02 – 0.2 BAR	0 – 1 BAR	GC
0.05 – 0.5 BAR	0 – 2.5 BAR	GD
0.1 – 1.0 BAR	0 – 5 BAR	GE
0.2 – 2.0 BAR	0 – 10 BAR	GF
0.5 – 5.0 BAR	0 – 25 BAR	GG
1.0 – 10 BAR	0 – 30 BAR	GH
2.0 – 20 BAR	0 – 60 BAR	GJ
7 – 70 BAR	0 – 105 BAR	GK
30– 300 BAR	0 – 400 BAR	GL

ABSOLUTE NOMINAL PRESSURE	MAX OVER PRESSURE	CODE
0 – 0.2 BAR	1 BAR A	AB
0 – 0.5 BAR	2.5 BAR A	AC
0 – 1.0 BAR	5 BAR A	AD
0 – 2.0 BAR	10 BAR A	AE
0 – 5.0 BAR	25 BAR A	AF
0 – 10 BAR	30 BAR A	AG
0 – 20 BAR	60 BAR A	AH
0 – 70 BAR	105 BAR A	AJ
0 – 300 BAR	400 BAR A	AK

APPROVAL	CODE
NON CERT	0
I.S.	1

PROCESS CONNECTION	CODE
1/4" NPT MALE	AC

PROCESS CONNECTION MATERIAL	CODE
ST.STL 316 S31	1

TEMPERATURE BARRIER	CODE
NO	X
YES	A

NOTE:-
KALREZ and E.P.D.M. 'O' rings are fitted to the wetted end of sensor only. Other 'O' rings fitted are BUNA 'N'

STATE CALIBRATION TO NON STANDARD RANGE	

ORDER CODES FOR
1/4" NPT MALE INDUSTRIAL VERSION

9000M [ ] [ ] [ ] [ ] **AC** **1** **X**

ELECTRONICS ENCLOSURE MATERIAL	CODE
ST. STEEL 316 S31	S
ALUMINIUM BRONZE	A

O RING MATERIIAL	CODE
VITON	1
BUNA–N	2

SALES TO STATE PROCESS FLUID & TEMPERATURE BELOW

GAUGE NOMINAL PRESSURE	MAX OVER PRESSURE	CODE
0.02 – 0.2 BAR	0 – 1 BAR	GC
0.05 – 0.5 BAR	0 – 2.5 BAR	GD
0.1 – 1.0 BAR	0 – 5 BAR	GE
0.2 – 2.0 BAR	0 – 10 BAR	GF
0.5 – 5.0 BAR	0 – 25 BAR	GG
1.0 – 10 BAR	0 – 30 BAR	GH
2.0 – 20 BAR	0 – 60 BAR	GJ

APPROVAL	CODE
NON CERT	0
I.S.	1

PROCESS CONNECTION	CODE
1/4" NPT MALE	AC

PROCESS CONNECTION MATERIAL	CODE
ST.STL 316 S31	1
ALUMINIUM BRONZE	3
TITANIUM WETTED PART ONLY ST.STLEEL 316L	4

TEMPERATURE BARRIER	CODE
NO	X

STATE CALIBRATION TO NON STANDARD RANGE	

ORDER CODES FOR
1/4" NPT MALE MARINE VERSION

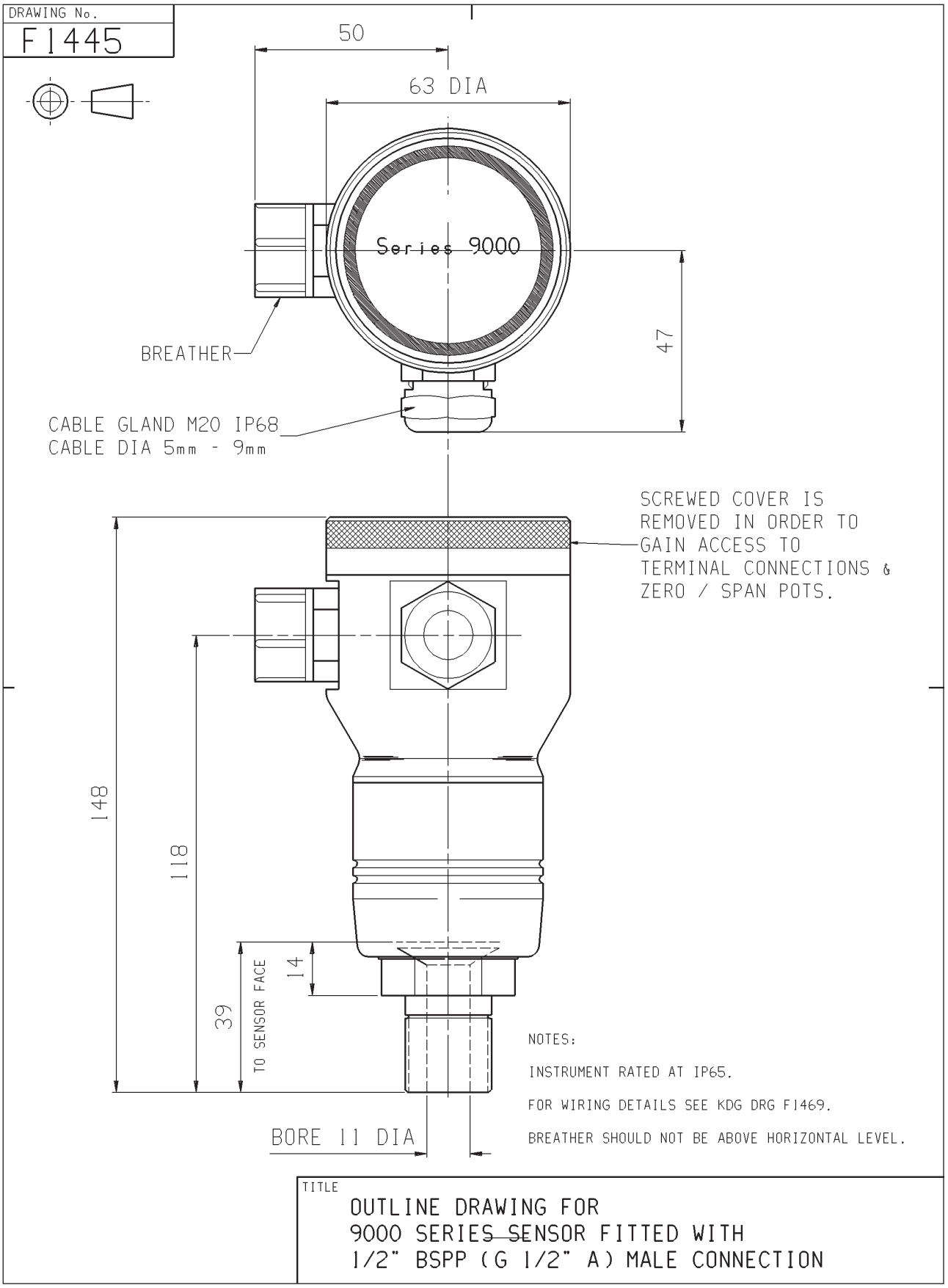
DRAWING No.
F1445
50
63 DIA
Series 9000
BREATHER
47
CABLE GLAND M20 IP68
CABLE DIA 5mm - 9mm
SCREWED COVER IS
REMOVED IN ORDER TO
GAIN ACCESS TO
TERMINAL CONNECTIONS &
ZERO / SPAN POTS.
148
118
39
TO SENSOR FACE
14
BORE 11 DIA
NOTES:
INSTRUMENT RATED AT IP65.
FOR WIRING DETAILS SEE KDG DRG F1469.
BREATHER SHOULD NOT BE ABOVE HORIZONTAL LEVEL.
TITLE
OUTLINE DRAWING FOR
9000 SERIES SENSOR FITTED WITH
1/2" BSPP (G 1/2" A) MALE CONNECTION

9000	S				AD	1	

ELECTRONICS ENCLOSURE AND PROCESS CONNECTION MATERIAL	CODE
ST. STEEL 316 S31	S

O RING MATERIIAL	CODE
VITON	1
BUNA–N	2
KALREZ	3
EPDM	4

SALES TO STATE PROCESS FLUID & TEMPERATURE BELOW

GAUGE NOMINAL PRESSURE	MAX OVER PRESSURE	CODE
0.01 – 0.1 BAR	0 – 0.5 BAR	GB
0.02 – 0.2 BAR	0 – 1 BAR	GC
0.05 – 0.5 BAR	0 – 2.5 BAR	GD
0.1 – 1.0 BAR	0 – 5 BAR	GE
0.2 – 2.0 BAR	0 – 10 BAR	GF
0.5 – 5.0 BAR	0 – 25 BAR	GG
1.0 – 10 BAR	0 – 30 BAR	GH
2.0 – 20 BAR	0 – 60 BAR	GJ
7 – 70 BAR	0 – 105 BAR	GK
30– 300 BAR	0 – 400 BAR	GL

ABSOLUTE NOMINAL PRESSURE	MAX OVER PRESSURE	CODE
0 – 0.2 BAR	1 BAR A	AB
0 – 0.5 BAR	2.5 BAR A	AC
0 – 1.0 BAR	5 BAR A	AD
0 – 2.0 BAR	10 BAR A	AE
0 – 5.0 BAR	25 BAR A	AF
0 – 10 BAR	30 BAR A	AG
0 – 20 BAR	60 BAR A	AH
0 – 70 BAR	105 BAR A	AJ
0 – 300 BAR	400 BAR A	AK

APPROVAL	CODE
NON CERT	0
I.S	1

PROCESS CONNECTION	CODE
G 1/2" A (1/2" BSPP)	AD

PROCESS CONNECTION MATERIAL	CODE
ST.STL 316 S31	1

TEMPERATURE BARRIER	CODE
NO	X
YES	A

NOTE:-
KALREZ and E.P.D.M. 'O' rings are fitted to the wetted end of sensor only. Other 'O' rings fitted are BUNA 'N'

STATE CALIBRATION TO NON STANDARD RANGE	

ORDER CODES FOR
G 1/2" A (1/2" BSPP) CONNECTION INDUSTRIAL VERSION

9000M [ ] [ ] [ ] [ ] **AD** [ ] **X**

ELECTRONICS ENCLOSURE MATERIAL	CODE
ST. STEEL 316 S31	S
ALUMINIUM BRONZE	A

O RING MATERIIAL	CODE
VITON	1
BUNA–N	2

SALES TO STATE PROCESS FLUID & TEMPERATURE BELOW

GAUGE NOMINAL PRESSURE	MAX OVER PRESSURE	CODE
0.02 – 0.2 BAR	0 – 1 BAR	GC
0.05 – 0.5 BAR	0 – 2.5 BAR	GD
0.1 – 1.0 BAR	0 – 5 BAR	GE
0.2 – 2.0 BAR	0 – 10 BAR	GF
0.5 – 5.0 BAR	0 – 25 BAR	GG
1.0 – 10 BAR	0 – 30 BAR	GH
2.0 – 20 BAR	0 – 60 BAR	GJ

APPROVAL	CODE
NON CERT	0
I.S.	1

PROCESS CONNECTION	CODE
G 1/2" A (1/2" BSPP)	AD

PROCESS CONNECTION MATERIAL	CODE
ST.STL 316 S31	1
ALUMINIUM BRONZE	3
TITANIUM WETTED PART ONLY ST.STLEEL 316L	4

TEMPERATURE BARRIER	CODE
NO	X

STATE CALIBRATION TO NON STANDARD RANGE	

ORDER CODES FOR
G 1/2" A (1/2" BSPP) CONNECTION MARINE VERSION

DRAWING No.
F1448

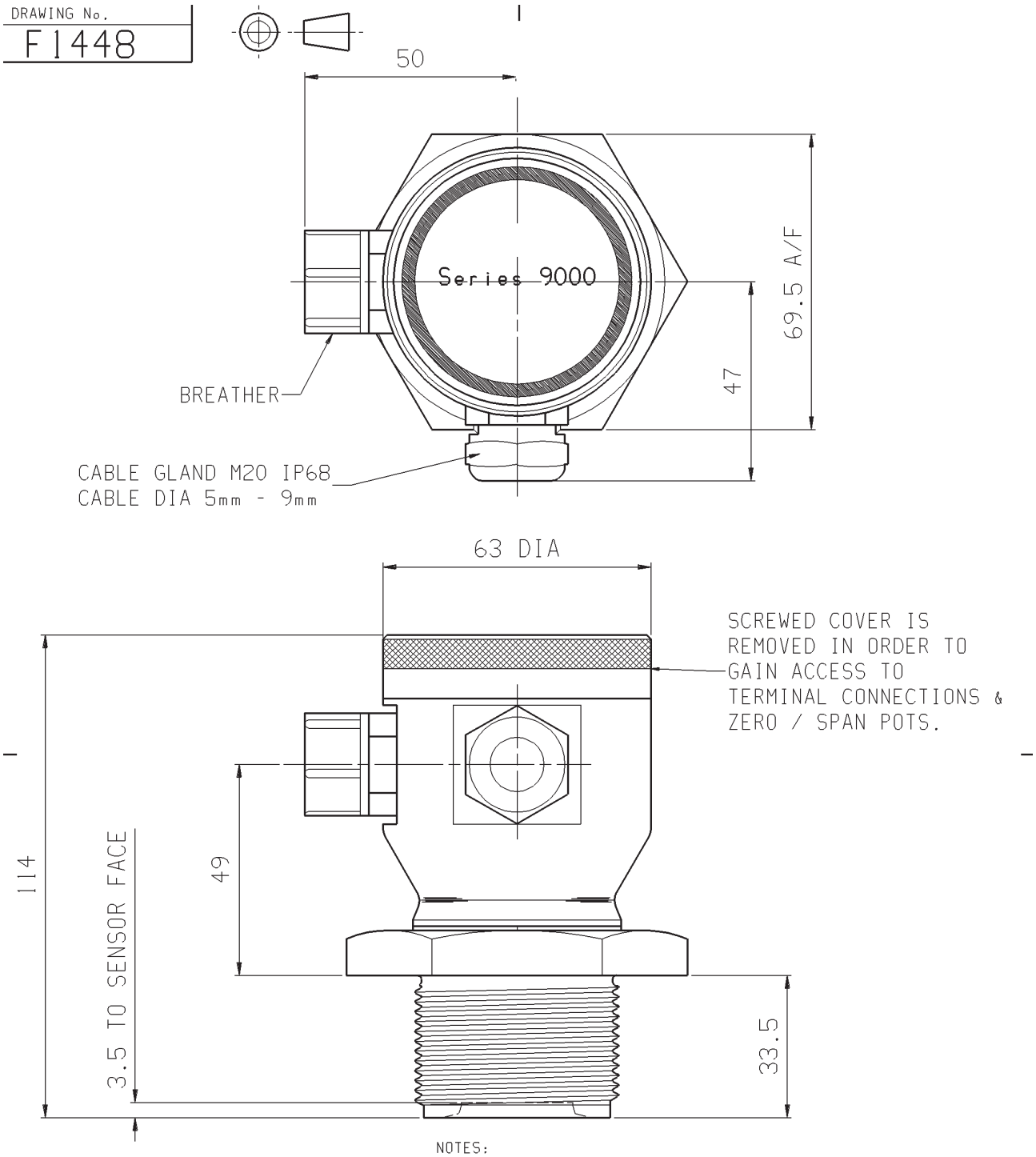

NOTES:

INSTRUMENT RATED AT IP65.

FOR WIRING DETAILS SEE KDG DRG F1469.

BREATHER SHOULD NOT BE ABOVE HORIZONTAL LEVEL.

TITLE

OUTLINE DRAWING FOR
9000 SERIES SENSOR FITTED WITH
G 1-1/2" A (1-1/2" BSPP) CONNECTION

9000	S				AE	1	

ELECTRONICS ENCLOSURE AND PROCESS CONNECTION MATERIAL	CODE
ST. STEEL 316 S31	S

O RING MATERIIAL	CODE
VITON	1
BUNA–N	2
KALREZ	3
EPDM	4

SALES TO STATE PROCESS FLUID & TEMPERATURE BELOW

GAUGE NOMINAL PRESSURE	MAX OVER PRESSURE	CODE
0.01 – 0.1 BAR	0 – 0.5 BAR	GB
0.02 – 0.2 BAR	0 – 1 BAR	GC
0.05 – 0.5 BAR	0 – 2.5 BAR	GD
0.1 – 1.0 BAR	0 – 5 BAR	GE
0.2 – 2.0 BAR	0 – 10 BAR	GF
0.5 – 5.0 BAR	0 – 25 BAR	GG
1.0 – 10 BAR	0 – 30 BAR	GH
2.0 – 20 BAR	0 – 60 BAR	GJ
7 – 70 BAR	0 – 105 BAR	GK
30– 300 BAR	0 – 400 BAR	GL

ABSOLUTE NOMINAL PRESSURE	MAX OVER PRESSURE	CODE
0 – 0.2 BAR	1 BAR A	AB
0 – 0.5 BAR	2.5 BAR A	AC
0 – 1.0 BAR	5 BAR A	AD
0 – 2.0 BAR	10 BAR A	AE
0 – 5.0 BAR	25 BAR A	AF
0 – 10 BAR	30 BAR A	AG
0 – 20 BAR	60 BAR A	AH
0 – 70 BAR	105 BAR A	AJ
0 – 300 BAR	400 BAR A	AK

APPROVAL	CODE
NON CERT	0
I.S.	1

PROCESS CONNECTION	CODE
G 1–1/2" A (1–1/2" BSPP)	AE

PROCESS CONNECTION MATERIAL	CODE
ST.STL 316 S31	1

TEMPERATURE BARRIER	CODE
NO	X
YES	A

NOTE:-
KALREZ and E.P.D.M. 'O' rings are fitted to the wetted end of sensor only. Other 'O' rings fitted are BUNA 'N'

STATE CALIBRATION TO NON STANDARD RANGE	

ORDER CODES FOR
G 1 - 1/2" A (1 - 1/2" BSPP) CONNECTION INDUSTRIAL VERSION

9000M [ ] [ ] [ ] [ ] **AE** [ ] **X**

ELECTRONICS ENCLOSURE MATERIAL	CODE
ST. STEEL 316 S31	S
ALUMINIUM BRONZE	A

O RING MATERIIAL	CODE
VITON	1
BUNA–N	2

SALES TO STATE PROCESS FLUID & TEMPERATURE BELOW

GAUGE NOMINAL PRESSURE	MAX OVER PRESSURE	CODE
0.02 – 0.2 BAR	0 – 1 BAR	GC
0.05 – 0.5 BAR	0 – 2.5 BAR	GD
0.1 – 1.0 BAR	0 – 5 BAR	GE
0.2 – 2.0 BAR	0 – 10 BAR	GF
0.5 – 5.0 BAR	0 – 25 BAR	GG
1.0 – 10 BAR	0 – 30 BAR	GH
2.0 – 20 BAR	0 – 60 BAR	GJ

APPROVAL	CODE
NON CERT	0
I.S.	1

PROCESS CONNECTION	CODE
G 1–1/2" A (1–1/2" BSPP)	AE

PROCESS CONNECTION MATERIAL	CODE
ST.STL 316 S31	1
ALUMINIUM BRONZE	3
TITANIUM WETTED PART ONLY ST.STLEEL 316L	4

TEMPERATURE BARRIER	CODE
NO	X

STATE CALIBRATION TO NON STANDARD RANGE	

ORDER CODES FOR
G 1 - 1/2" A (1 - 1/2" BSPP) CONNECTION MARINE VERSION

DRAWING No.
F1454

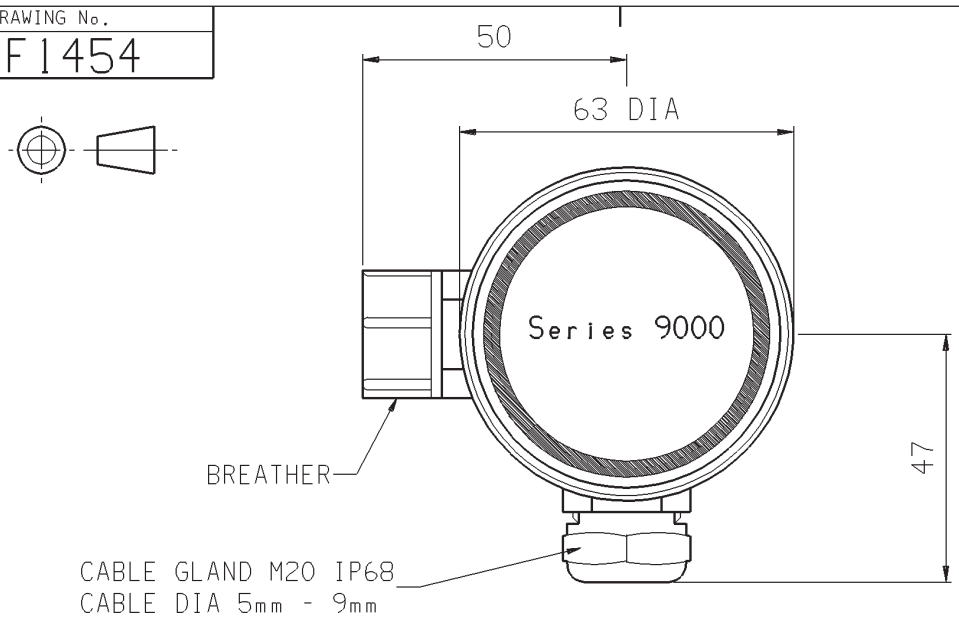

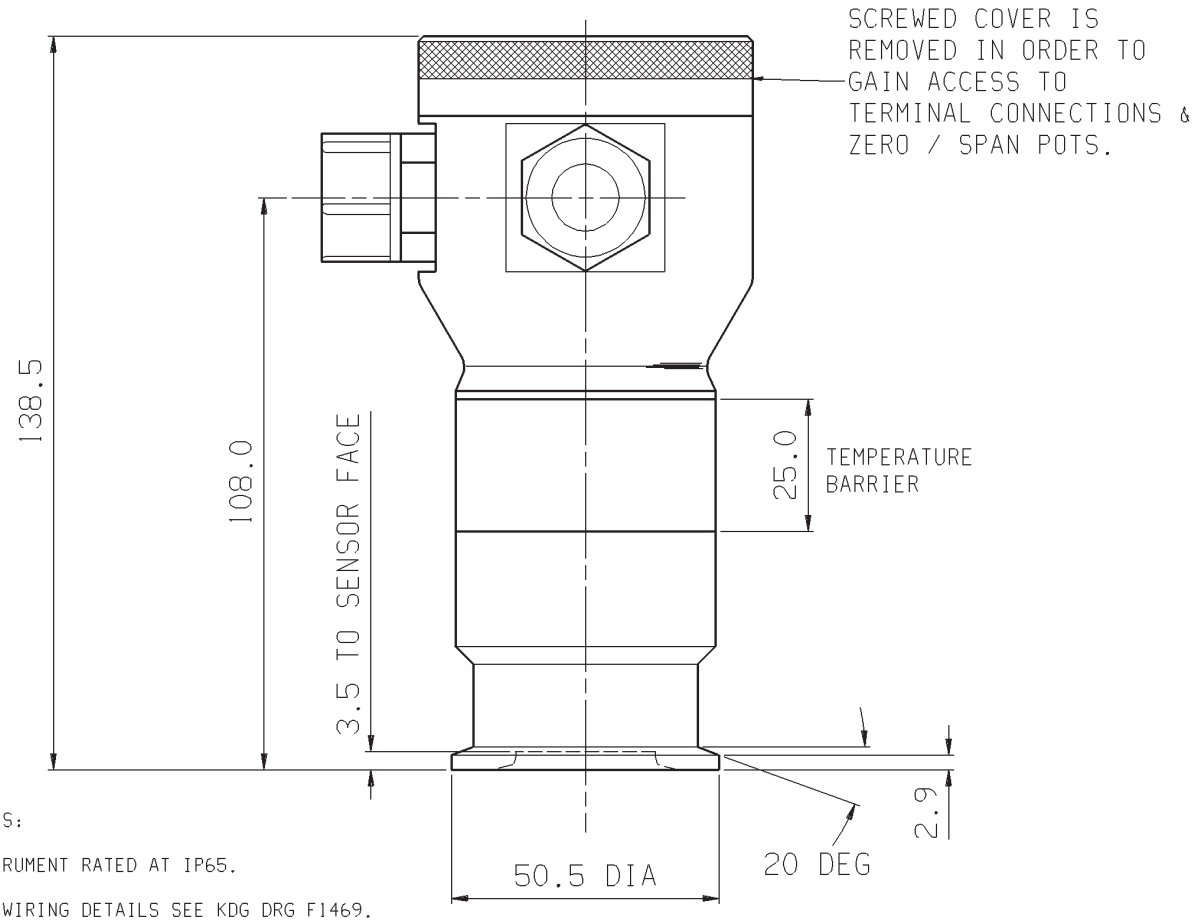

NOTES:

INSTRUMENT RATED AT IP65.

FOR WIRING DETAILS SEE KDG DRG F1469.

BREATHER SHOULD NOT BE ABOVE HORIZONTAL LEVEL.

TITLE

OUTLINE DRAWING FOR
9000 SERIES SENSOR FITTED WITH
1-1/2" TRI CLAMP CONNECTION TO BS4825 Pt. 3

9000	S				AF	1	

ELECTRONICS ENCLOSURE AND PROCESS CONNECTION MATERIAL	CODE
ST. STEEL 316 S31	S

GAUGE NOMINAL PRESSURE	MAX OVER PRESSURE	CODE
0.01 – 0.1 BAR	0 – 0.5 BAR	GB
0.02 – 0.2 BAR	0 – 1 BAR	GC
0.05 – 0.5 BAR	0 – 2.5 BAR	GD
0.1 – 1.0 BAR	0 – 5 BAR	GE
0.2 – 2.0 BAR	0 – 10 BAR	GF
0.5 – 5.0 BAR	0 – 25 BAR	GG
1.0 – 10 BAR	0 – 30 BAR	GH
2.0 – 20 BAR	0 – 60 BAR	GJ

APPROVAL	CODE
NON CERT	0
I.S.	1

PROCESS CONNECTION	CODE
1–1/2" TRI–CLAMP	AF

O RING MATERIIAL	CODE
VITON	1
BUNA–N	2
KALREZ	3
EPDM	4

PROCESS CONNECTION MATERIAL	CODE
ST.STL 316 S31	1

TEMPERATURE BARRIER	CODE
NO	X
YES	A

SALES TO STATE PROCESS FLUID & TEMPERATURE BELOW

Note:
Temperature barrier recommended for hygienic applications.

NOTE:-
KALREZ and E.P.D.M. 'O' rings are fitted to the wetted end of sensor only. Other 'O' rings fitted are BUNA 'N'

STATE CALIBRATION TO NON STANDARD RANGE	

ORDER CODES FOR
1-1/2" TRI CLAMP CONNECTION

DRAWING No.
F1455

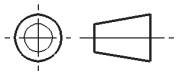

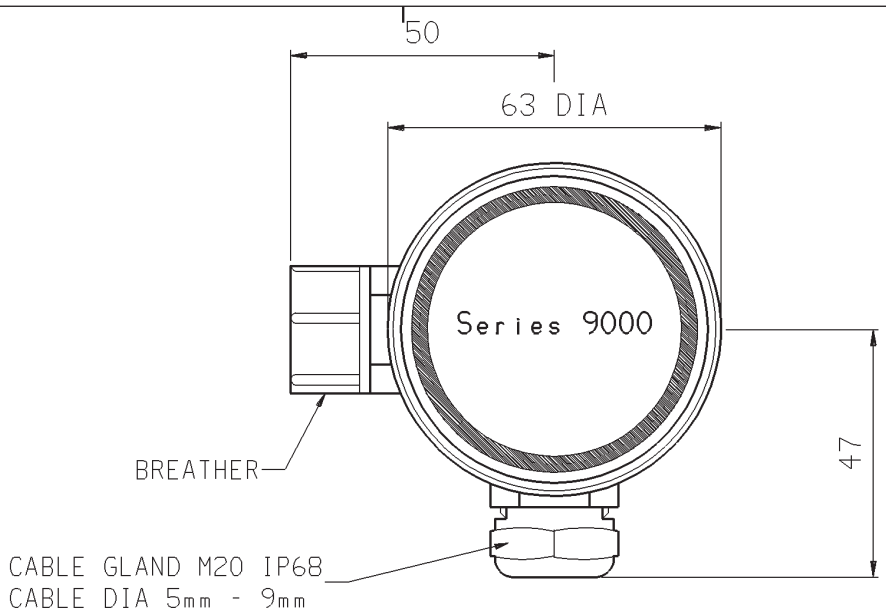

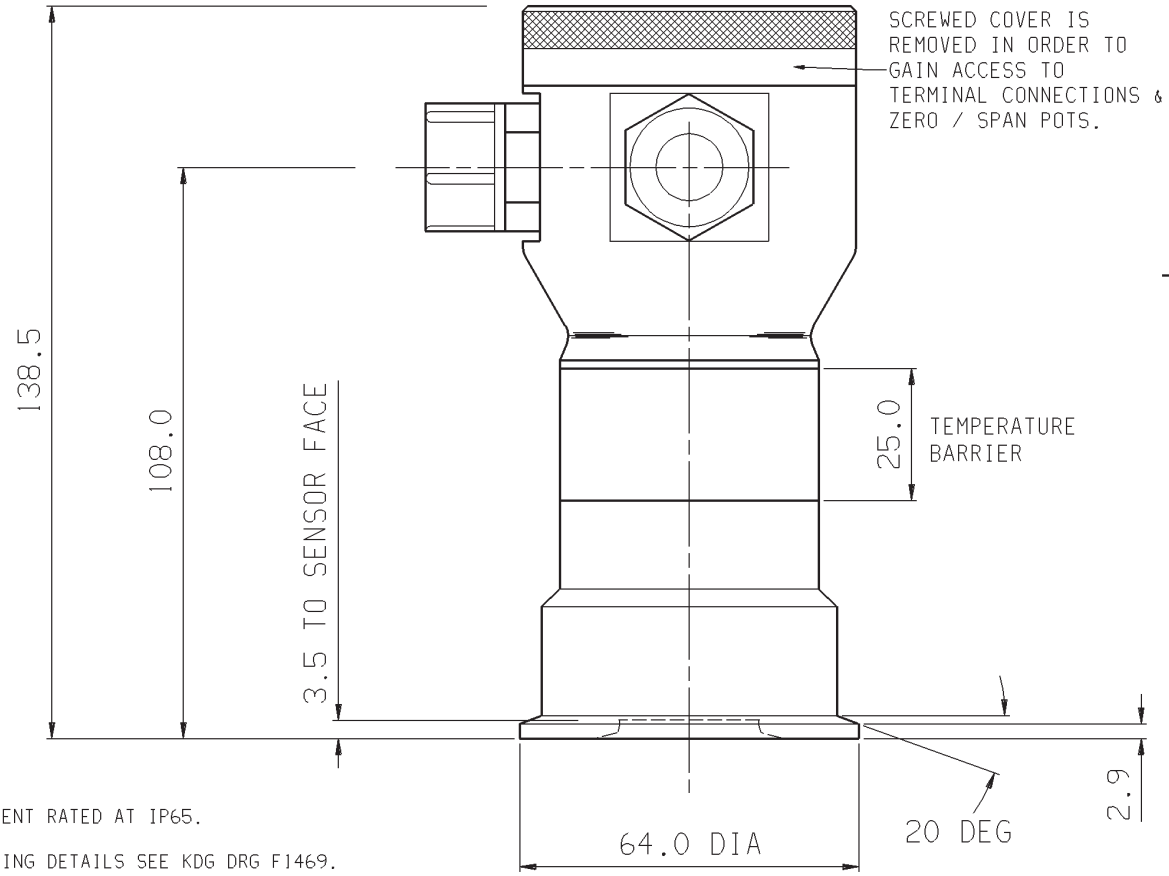

NOTES:

INSTRUMENT RATED AT IP65.

FOR WIRING DETAILS SEE KDG DRG F1469.

BREATHER SHOULD NOT BE ABOVE HORIZONTAL LEVEL.

TITLE

OUTLINE DRAWING FOR
9000 SERIES SENSOR FITTED WITH
2" TRI CLAMP CONNECTION TO BS4825 Pt. 3

9000	S				AG	1	

ELECTRONICS ENCLOSURE AND PROCESS CONNECTION MATERIAL	CODE
ST. STEEL 316 S31	S

GAUGE NOMINAL PRESSURE	MAX OVER PRESSURE	CODE
0.01 – 0.1 BAR	0 – 0.5 BAR	GB
0.02 – 0.2 BAR	0 – 1 BAR	GC
0.05 – 0.5 BAR	0 – 2.5 BAR	GD
0.1 – 1.0 BAR	0 – 5 BAR	GE
0.2 – 2.0 BAR	0 – 10 BAR	GF
0.5 – 5.0 BAR	0 – 25 BAR	GG
1.0 – 10 BAR	0 – 30 BAR	GH
2.0 – 20 BAR	0 – 60 BAR	GJ

APPROVAL	CODE
NON CERT	0
I.S.	1

PROCESS CONNECTION	CODE
2" TRI–CLAMP	AG

O RING MATERIIAL	CODE
VITON	1
BUNA–N	2
KALREZ	3
EPDM	4

PROCESS CONNECTION MATERIAL	CODE
ST.STL 316 S31	1

TEMPERATURE BARRIER	CODE
NO	X
YES	A

SALES TO STATE PROCESS FLUID & TEMPERATURE BELOW

Note:
Temperature barrier recommended for hygienic applications.

NOTE:-
KALREZ and E.P.D.M. 'O' rings are fitted to the wetted end of sensor only. Other 'O' rings fitted are BUNA 'N'

STATE CALIBRATION TO NON STANDARD RANGE	

ORDER CODES FOR
2" TRI CLAMP CONNECTION

DRAWING No.

F1456

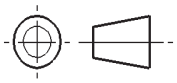

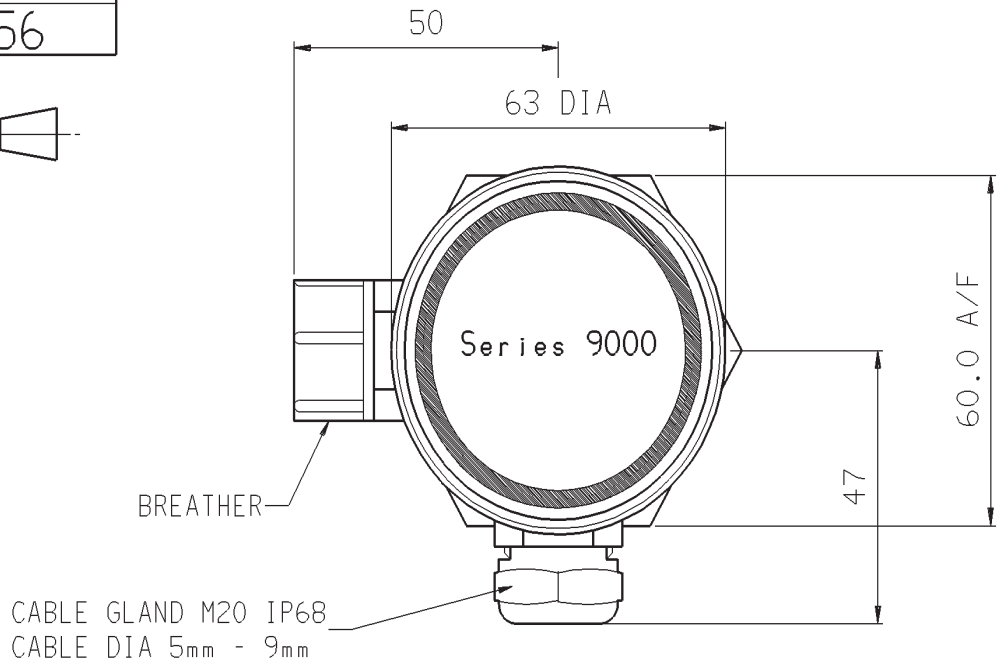

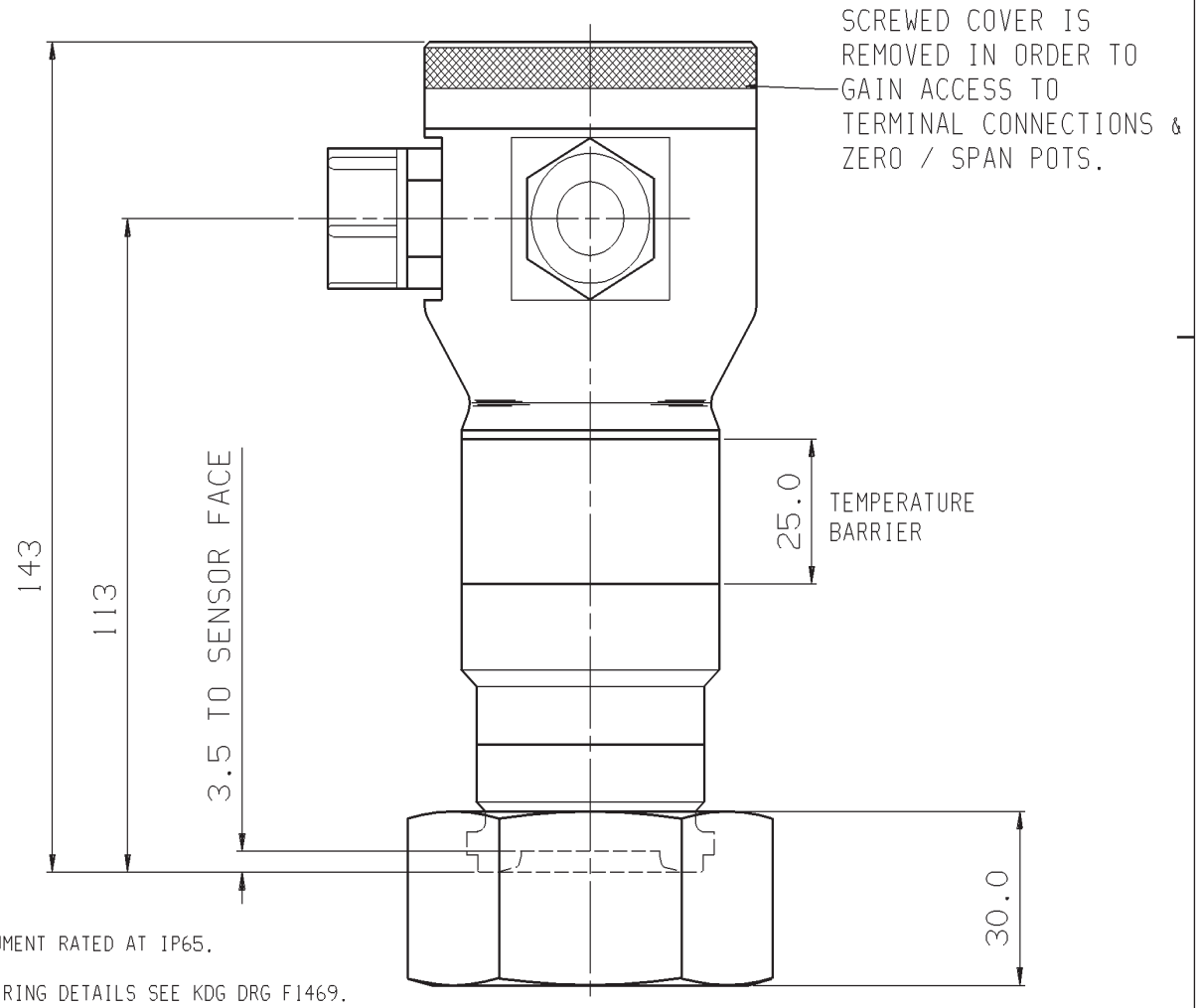

NOTES:

INSTRUMENT RATED AT IP65.

FOR WIRING DETAILS SEE KDG DRG F1469.

BREATHER SHOULD NOT BE ABOVE HORIZONTAL LEVEL.

TITLE

OUTLINE DRAWING FOR
9000 SERIES SENSOR FITTED WITH
1-1/2" IDF CONNECTION TO BS4825 Pt. 4

9000	S				AH	1	

ELECTRONICS ENCLOSURE AND PROCESS CONNECTION MATERIAL	CODE
ST. STEEL 316 S31	S

GAUGE NOMINAL PRESSURE	MAX OVER PRESSURE	CODE
0.01 – 0.1 BAR	0 – 0.5 BAR	GB
0.02 – 0.2 BAR	0 – 1 BAR	GC
0.05 – 0.5 BAR	0 – 2.5 BAR	GD
0.1 – 1.0 BAR	0 – 5 BAR	GE
0.2 – 2.0 BAR	0 – 10 BAR	GF
0.5 – 5.0 BAR	0 – 25 BAR	GG
1.0 – 10 BAR	0 – 30 BAR	GH

APPROVAL	CODE
NON CERT	0
I.S.	1

PROCESS CONNECTION	CODE
1–1/2" IDF	AH

O RING MATERIIAL	CODE
VITON	1
BUNA–N	2
KALREZ	3
EPDM	4

PROCESS CONNECTION MATERIAL	CODE
ST.STL 316 S31	1

TEMPERATURE BARRIER	CODE
NO	X
YES	A

SALES TO STATE PROCESS FLUID & TEMPERATURE BELOW

Note:
Temperature barrier recommended for hygienic applications.

NOTE:-
KALREZ and E.P.D.M. 'O' rings are fitted to the wetted end of sensor only. Other 'O' rings fitted are BUNA 'N'

STATE CALIBRATION TO NON STANDARD RANGE	

ORDER CODES FOR
1-1/2" IDF CONNECTION

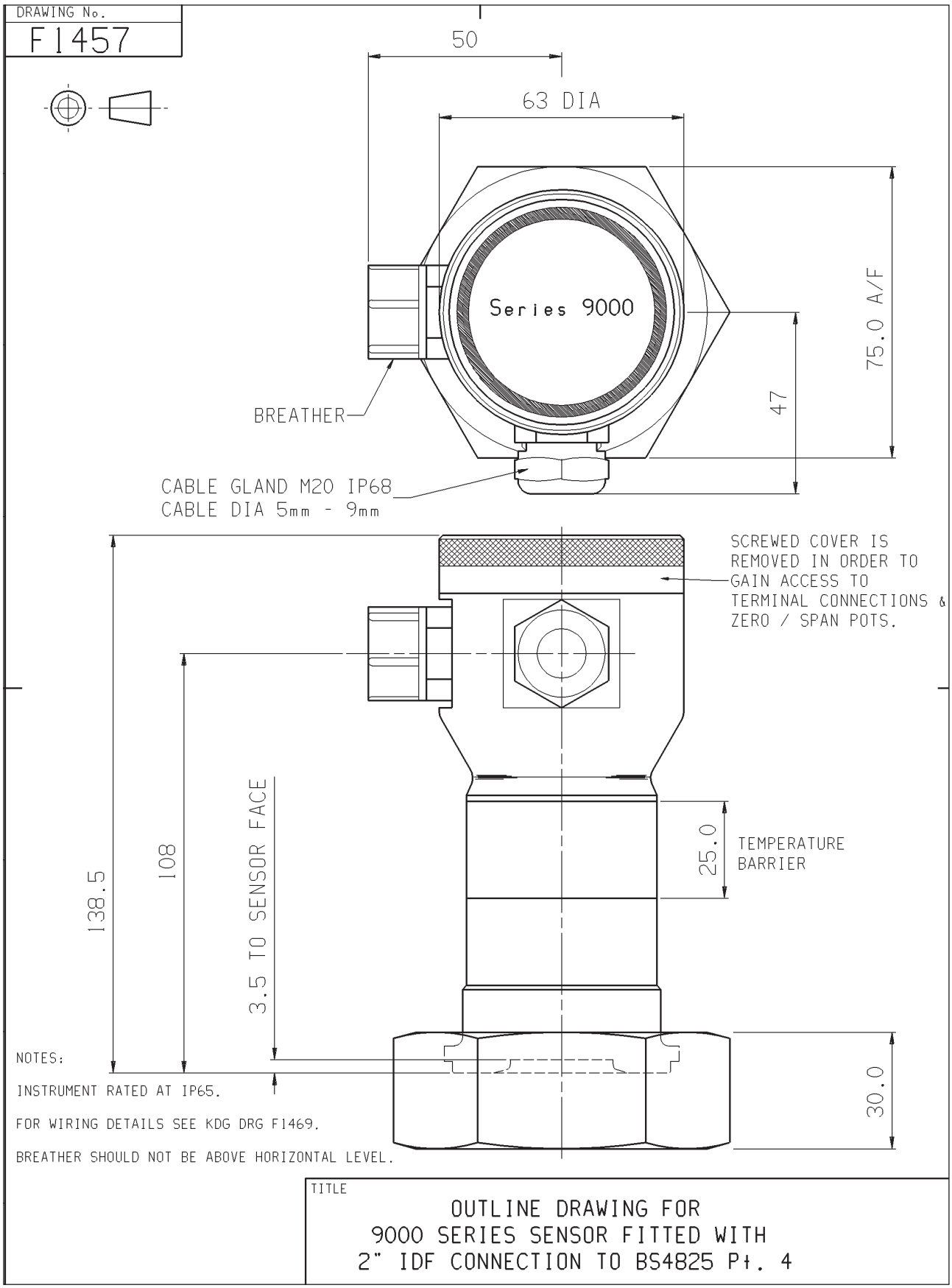
DRAWING No.
F1457
50
63 DIA
Series 9000
75.0 A/F
47
BREATHER
CABLE GLAND M20 IP68
CABLE DIA 5mm - 9mm
SCREWED COVER IS REMOVED IN ORDER TO GAIN ACCESS TO TERMINAL CONNECTIONS & ZERO / SPAN POTS.
138.5
108
3.5 TO SENSOR FACE
25.0
TEMPERATURE BARRIER
30.0
NOTES:
INSTRUMENT RATED AT IP65.
FOR WIRING DETAILS SEE KDG DRG F1469.
BREATHER SHOULD NOT BE ABOVE HORIZONTAL LEVEL.
TITLE
OUTLINE DRAWING FOR
9000 SERIES SENSOR FITTED WITH
2" IDF CONNECTION TO BS4825 Pt. 4

9000	S				AJ	1	

ELECTRONICS ENCLOSURE AND PROCESS CONNECTION MATERIAL	CODE
ST. STEEL 316 S31	S

GAUGE NOMINAL PRESSURE	MAX OVER PRESSURE	CODE
0.01 – 0.1 BAR	0 – 0.5 BAR	GB
0.02 – 0.2 BAR	0 – 1 BAR	GC
0.05 – 0.5 BAR	0 – 2.5 BAR	GD
0.1 – 1.0 BAR	0 – 5 BAR	GE
0.2 – 2.0 BAR	0 – 10 BAR	GF
0.5 – 5.0 BAR	0 – 25 BAR	GG
1.0 – 10 BAR	0 – 30 BAR	GH

APPROVAL	CODE
NON CERT	0
I.S.	1

PROCESS CONNECTION	CODE
2" IDF	AJ

O RING MATERIIAL	CODE
VITON	1
BUNA–N	2
KALREZ	3
EPDM	4

PROCESS CONNECTION MATERIAL	CODE
ST.STL 316 S31	1

TEMPERATURE BARRIER	CODE
NO	X
YES	A

SALES TO STATE PROCESS FLUID & TEMPERATURE BELOW

Note:
Temperature barrier recommended for hygienic applications.

NOTE:-
KALREZ and E.P.D.M. 'O' rings are fitted to the wetted end of sensor only. Other 'O' rings fitted are BUNA 'N'

STATE CALIBRATION TO NON STANDARD RANGE	

ORDER CODES FOR
2" IDF CONNECTION

DRAWING No.
F1458

NOTES:

INSTRUMENT RATED AT IP65.

FOR WIRING DETAILS SEE KDG DRG F1469.

BREATHER SHOULD NOT BE ABOVE HORIZONTAL LEVEL.

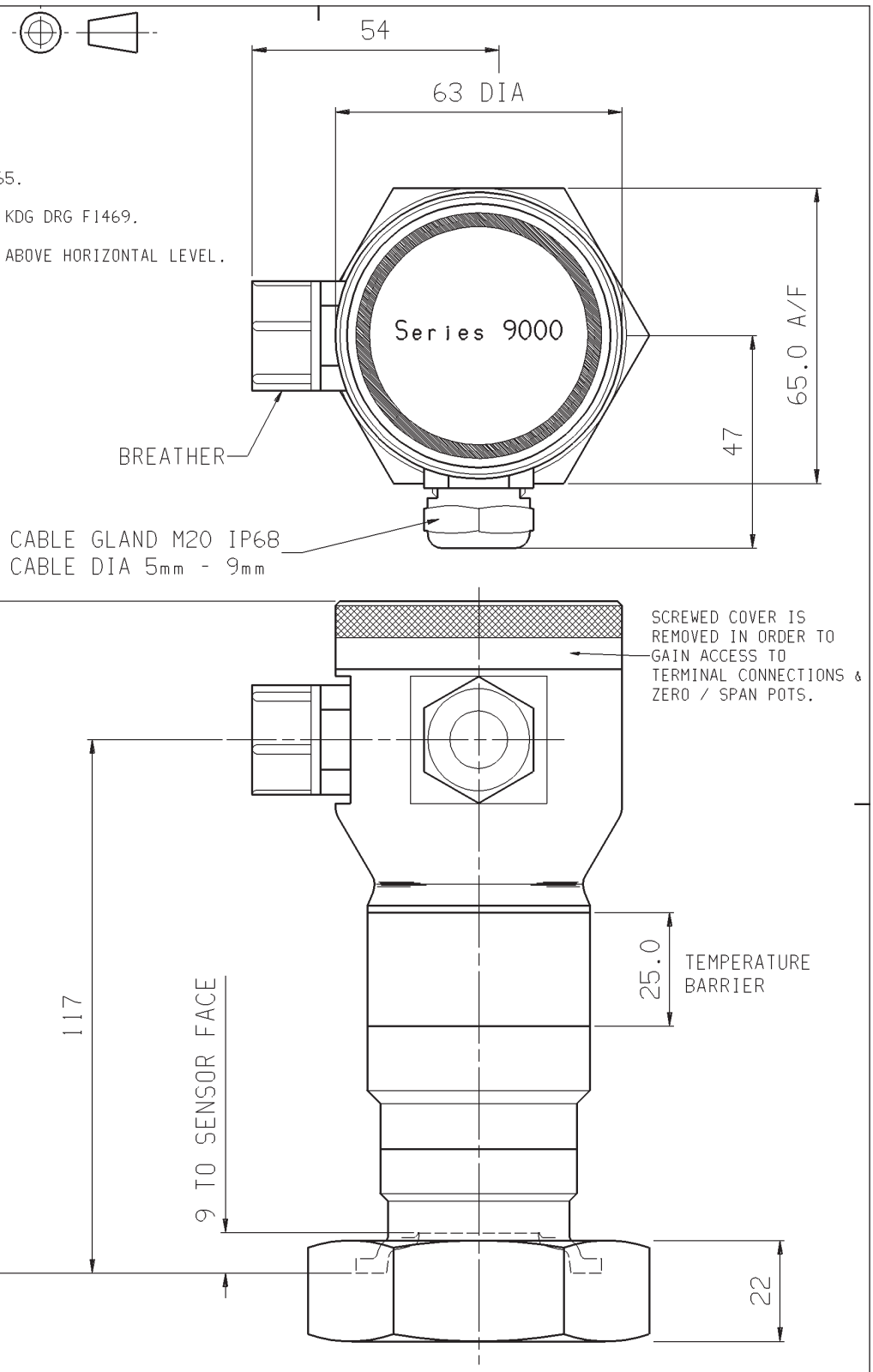

TITLE

OUTLINE DRAWING FOR
9000 SERIES SENSOR FITTED WITH
1-1/2" RJT CONNECTION TO BS4825 Pt. 5

9000	S				AK	1	

ELECTRONICS ENCLOSURE AND PROCESS CONNECTION MATERIAL	CODE
ST. STEEL 316 S31	S

O RING MATERIIAL	CODE
VITON	1
BUNA–N	2
KALREZ	3
EPDM	4

SALES TO STATE PROCESS FLUID & TEMPERATURE BELOW

GAUGE NOMINAL PRESSURE	MAX OVER PRESSURE	CODE
0.01 – 0.1 BAR	0 – 0.5 BAR	GB
0.02 – 0.2 BAR	0 – 1 BAR	GC
0.05 – 0.5 BAR	0 – 2.5 BAR	GD
0.1 – 1.0 BAR	0 – 5 BAR	GE
0.2 – 2.0 BAR	0 – 10 BAR	GF
0.5 – 5.0 BAR	0 – 25 BAR	GG
1.0 – 10 BAR	0 – 30 BAR	GH

APPROVAL	CODE
NON CERT	0
I.S.	1

PROCESS CONNECTION	CODE
1–1/2" RJT	AK

PROCESS CONNECTION MATERIAL	CODE
ST.STL 316 S31	1

TEMPERATURE BARRIER	CODE
NO	X
YES	A

Note:
Temperature barrier recommended for hygienic applications.

NOTE:-

STATE CALIBRATION TO NON STANDARD RANGE	

ORDER CODES FOR
1-1/2" RJT CONNECTION

DRAWING No.
F1459

NOTES:

INSTRUMENT RATED AT IP65.

FOR WIRING DETAILS SEE KDG DRG F1469.

BREATHER SHOULD NOT BE ABOVE HORIZONTAL LEVEL.

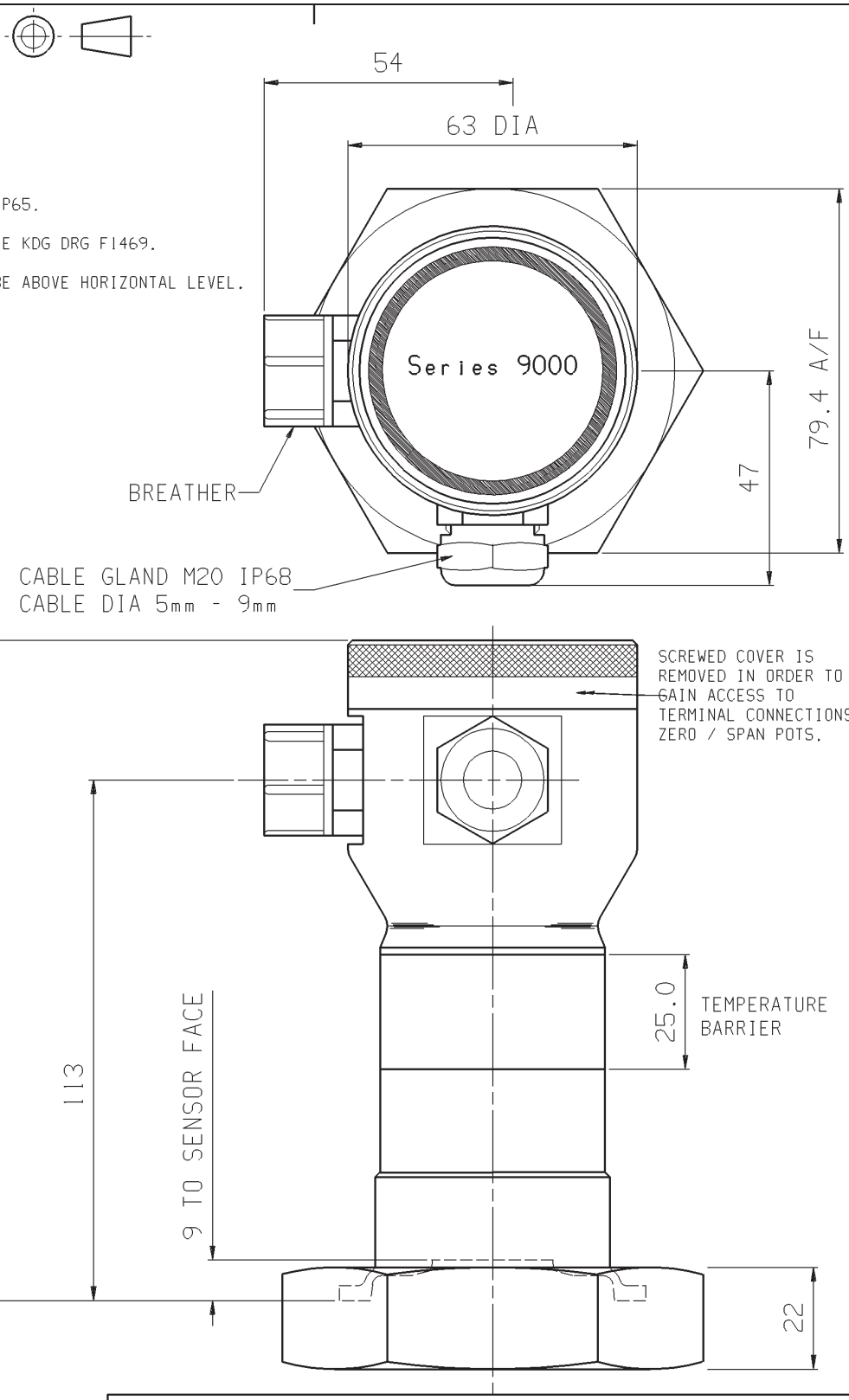

TITLE

OUTLINE DRAWING FOR
9000 SERIES SENSOR FITTED WITH
2" RJT CONNECTION TO BS4825 Pt. 5

9000	S				AL	1	

ELECTRONICS ENCLOSURE AND PROCESS CONNECTION MATERIAL	CODE
ST. STEEL 316 S31	S

GAUGE NOMINAL PRESSURE	MAX OVER PRESSURE	CODE
0.01 – 0.1 BAR	0 – 0.5 BAR	GB
0.02 – 0.2 BAR	0 – 1 BAR	GC
0.05 – 0.5 BAR	0 – 2.5 BAR	GD
0.1 – 1.0 BAR	0 – 5 BAR	GE
0.2 – 2.0 BAR	0 – 10 BAR	GF
0.5 – 5.0 BAR	0 – 25 BAR	GG
1.0 – 10 BAR	0 – 30 BAR	GH

APPROVAL	CODE
NON CERT	0
I.S.	1

PROCESS CONNECTION	CODE
2" RJT	AL

O RING MATERIIAL	CODE
VITON	1
BUNA–N	2
KALREZ	3
EPDM	4

PROCESS CONNECTION MATERIAL	CODE
ST.STL 316 S31	1

TEMPERATURE BARRIER	CODE
NO	X
YES	A

SALES TO STATE PROCESS FLUID & TEMPERATURE BELOW

Note:
Temperature barrier recommended for hygienic applications.

NOTE:-
KALREZ and E.P.D.M. 'O' rings are fitted to the wetted end of sensor only. Other 'O' rings fitted are BUNA 'N'

STATE CALIBRATION TO NON STANDARD RANGE	

ORDER CODES FOR
2" RJT CONNECTION

DRAWING No.

F1447

FLANGE TYPE	DIMENSION 'A'	DIMENSION 'B'	DIMENSION 'C'	DIMENSION 'D'	DIMENSION 'E'
DN50 PN40 DIN2635	165.0 DIA	125.0 P.C.D.	4 X 18.0 DIA	102.0 DIA	20.0 THICK
DN80 PN40 DIN2635	200.0 DIA	160.0 P.C.D.	8 X 18.0 DIA	138.0 DIA	24.0 THICK
2" ANSI B16.5 CLASS 150lb	152.0 DIA	120.6 P.C.D.	4 X 19.0 DIA	92.0 DIA	19.0 THICK
3" ANSI B16.5 CLASS 150lb	190.5 DIA	152.4 P.C.D.	4 X 19.0 DIA	127.0 DIA	24.0 THICK

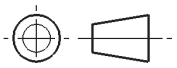

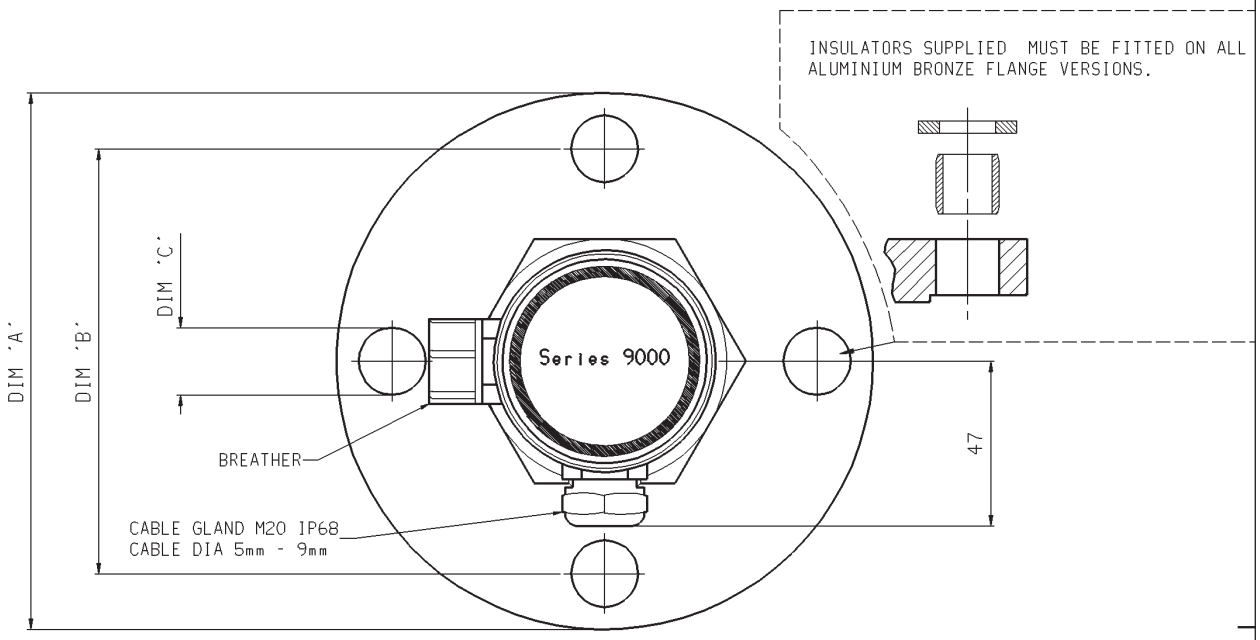

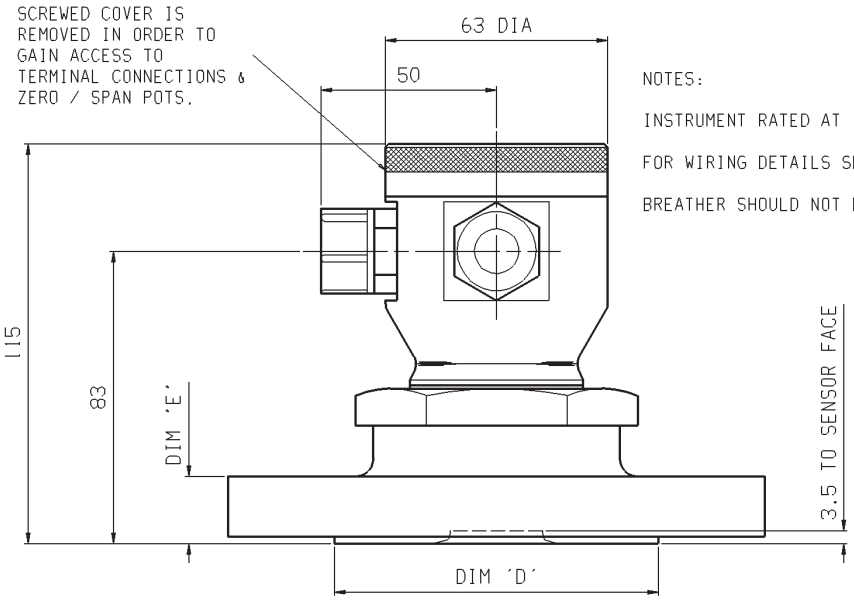

NOTES:

INSTRUMENT RATED AT IP65.

FOR WIRING DETAILS SEE KDG DRG F1469.

BREATHER SHOULD NOT BE ABOVE HORIZONTAL LEVEL.

TITLE

OUTLINE DRAWING FOR
9000 SERIES SENSOR FITTED WITH
1-1/2" BSPP CONNECTION TO FLANGE

DRAWING No.
F1450

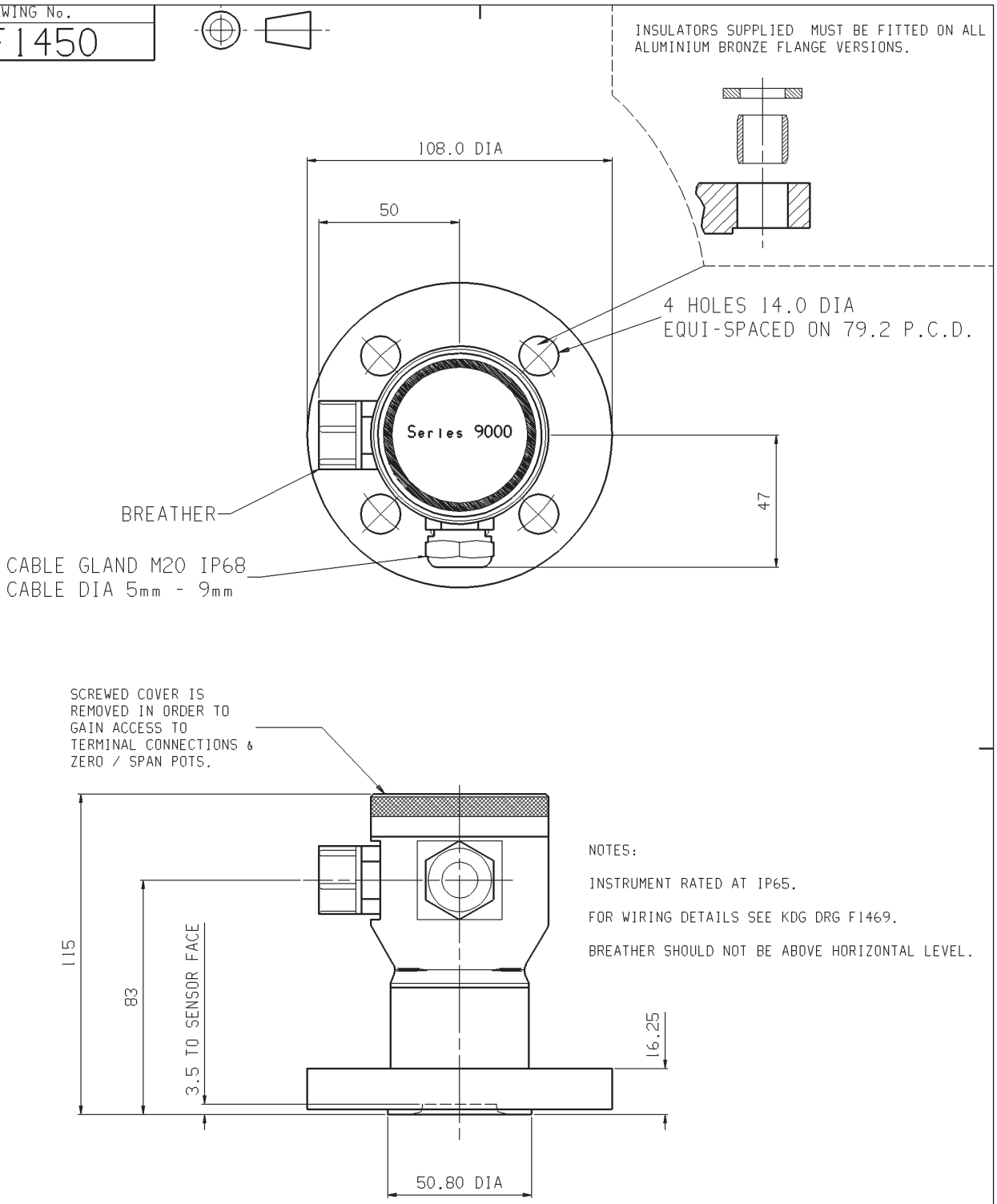

NOTES:

INSTRUMENT RATED AT IP65.

FOR WIRING DETAILS SEE KDG DRG F1469.

BREATHER SHOULD NOT BE ABOVE HORIZONTAL LEVEL.

TITLE

OUTLINE DRAWING FOR
9000 SERIES SENSOR FITTED WITH
1" ANSI B16.5 CLASS 150lb SLIP-ON FLANGE

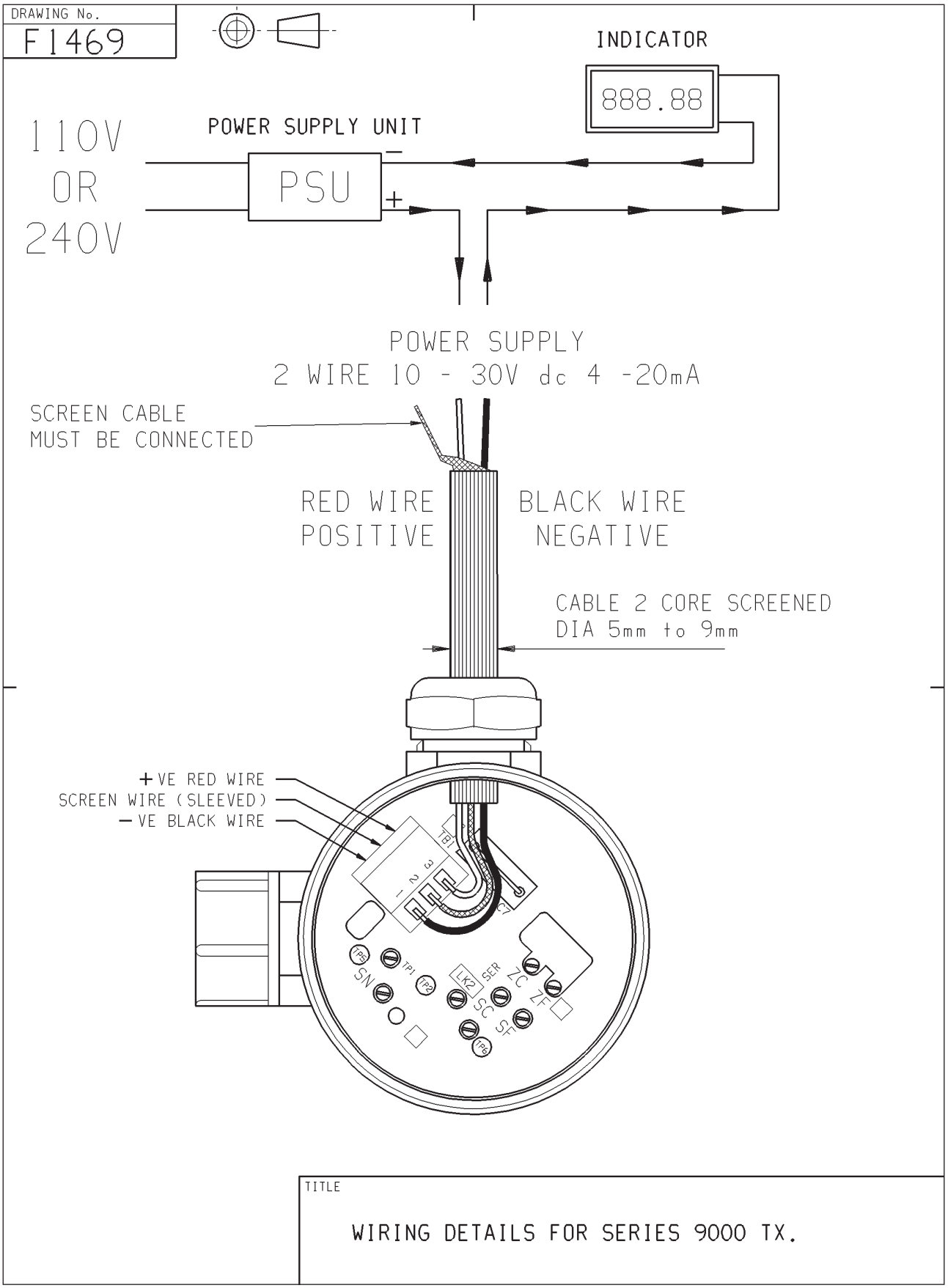
DRAWING No.
F1469
INDICATOR
888.88
110V
OR
240V
POWER SUPPLY UNIT
PSU
−
+
POWER SUPPLY
2 WIRE 10 - 30V dc 4 -20mA
SCREEN CABLE
MUST BE CONNECTED
RED WIRE
POSITIVE
BLACK WIRE
NEGATIVE
CABLE 2 CORE SCREENED
DIA 5mm to 9mm
+VE RED WIRE
SCREEN WIRE (SLEEVED)
−VE BLACK WIRE
TB1
3
2
1
C7
TP3
SN
TP1
TP2
LK2
SER
ZC
ZF
SC
SF
TP8
TITLE
WIRING DETAILS FOR SERIES 9000 TX.

9000	S					1	

ELECTRONICS ENCLOSURE AND PROCESS CONNECTION MATERIAL	CODE
ST. STEEL 316 S31	S

O RING MATERIIAL	CODE
VITON	1
BUNA–N	2
KALREZ	3
EPDM	4

SALES TO STATE PROCESS FLUID & TEMPERATURE BELOW

GAUGE NOMINAL PRESSURE	MAX OVER PRESSURE	CODE
0.01 – 0.1 BAR	0 – 0.5 BAR	GB
0.02 – 0.2 BAR	0 – 1 BAR	GC
0.05 – 0.5 BAR	0 – 2.5 BAR	GD
0.1 – 1.0 BAR	0 – 5 BAR	GE
0.2 – 2.0 BAR	0 – 10 BAR	GF
0.5 – 5.0 BAR	0 – 25 BAR	GG
1.0 – 10 BAR	0 – 30 BAR	GH
2.0 – 20 BAR	0 – 60 BAR	GJ

ABSOLUTE NOMINAL PRESSURE	MAX OVER PRESSURE	CODE
0 – 0.2 BAR	1 BAR A	AB
0 – 0.5 BAR	2.5 BAR A	AC
0 – 1.0 BAR	5 BAR A	AD
0 – 2.0 BAR	10 BAR A	AE
0 – 5.0 BAR	25 BAR A	AF
0 – 10 BAR	30 BAR A	AG
0 – 20 BAR	60 BAR A	AH

APPROVAL	CODE
NON CERT	0
I.S.	1

SLIP–ON FLANGE DN25 PN40 DIN263	AM
FIXED FLANGE DN50 PN40 DIN263	AN
FIXED FLANGE DN80 PN40 DIN263	AP
SLIP–ON FLANGE ANSI 1" B16.5 CLASS150	AQ
FIXED FLANGE ANSI 2" B16.5 150 CLASS 150	AR
FIXED FLANGE ANSI 3" B16.5 CLASS CLASS 150	AS

PROCESS CONNECTION MATERIAL	CODE
ST.STL 316 S31	1

TEMPERATURE BARRIER	CODE
NO	X
YES	A

NOTE:-
KALREZ and E.P.D.M. 'O' rings are fitted to the wetted end of sensor only. Other 'O' rings fitted are BUNA 'N'

STATE CALIBRATION TO NON STANDARD RANGE	

ORDER CODES FOR
FLANGED EXTERNAL TO VESSEL INDUSTRIAL VERSIONS

9000M [ ] [ ] [ ] [ ] [ ] 1 [ ]

ELECTRONICS ENCLOSURE MATERIAL	CODE
ST. STEEL 316 S31	S
ALUMINIUM BRONZE	A

O RING MATERIIAL	CODE
VITON	1
BUNA–N	2

SALES TO STATE PROCESS FLUID & TEMPERATURE BELOW

GAUGE NOMINAL PRESSURE	MAX OVER PRESSURE	CODE
0.02 – 0.2 BAR	0 – 1 BAR	GC
0.05 – 0.5 BAR	0 – 2.5 BAR	GD
0.1 – 1.0 BAR	0 – 5 BAR	GE
0.2 – 2.0 BAR	0 – 10 BAR	GF
0.5 – 5.0 BAR	0 – 25 BAR	GG
1.0 – 10 BAR	0 – 30 BAR	GH
2.0 – 20 BAR	0 – 60 BAR	GJ

APPROVAL	CODE
NON CERT	0
I.S.	1

SLIP–ON FLANGE DN25 PN40 DIN263	AM
FIXED FLANGE DN50 PN40 DIN263	AN
FIXED FLANGE DN80 PN40 DIN263	AP
SLIP–ON FLANGE ANSI 1" B16.5 CLASS150	AQ
FIXED FLANGE ANSI 2" B16.5 150 CLASS 150	AR
FIXED FLANGE ANSI 3" B16.5 CLASS CLASS 150	AS

PROCESS CONNECTION MATERIAL	CODE
ST.STL 316 S31	1
ALUMINIUM BRONZE	3
TITANIUM WETTED PART ONLY ST.STLEEL 316L	4

TEMPERATURE BARRIER	CODE
NO	X

STATE CALIBRATION TO NON STANDARD RANGE	

ORDER CODES FOR
FLANGED EXTERNAL TO VESSEL MARINE VERSION

The Emerson logo is a trade mark and service mark of Emerson Electric Co.
Mobrey is a registered trademark of Mobrey Ltd.
Chemraz® is a registered trademark of Green Tweed
All other marks are the property of their respective owners
We reserve the right to modify or improve the designs or specifications of product and services at any time without notice.

© 2000 Mobrey Ltd. All rights reserved.

International:
Emerson Process Management
Mobrey Ltd.
158 Edinburgh Avenue,
Slough, Berks, SL1 4UE, UK
T +44 1753 756600
F +44 1753 823589
www.mobrey.com

EMERSON™
Process Management