Mobrey
Gauged Head Verification Device

- Valuable aid for instrument calibration, commissioning and certification
- Easy reference check of calibrated flow
- Essential tool for the bottom reference setting
- Corrosion resistant Stainless Steel construction
- Reinforced polypropylene target plate

Unreliable flow data can result in inefficient plant operation and unnecessary investment in plant upgrades. This is particularly true in the case of measurement of industrial and municipal effluents, yet it is frequently given the least priority and attention.

Flow data obtained from a dependable source enables plant to be operated in an efficient manner. By optimising treatment processes, operators can ensure the maximum treatment capacities are achieved, before additional investment is made.

Open Channel Flow measurement systems such as weirs and flumes, frequently use non-contact ultrasonic level measuring instruments to determine flow. The most common cause of unreliable flow data is due to inaccurate setting of the gauge zero and measurement span of the ultrasonic device. With the aid of the Mobrey Head Verification Device (HVD) regular flow system checks can be carried out in a matter of minutes.

Installing and operating the MSP-HVD

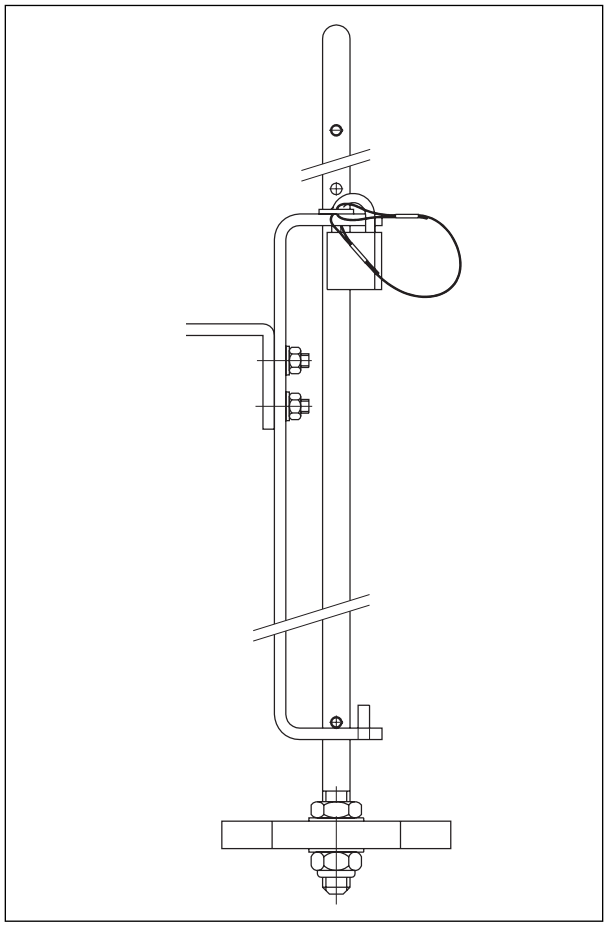

The MSP-HVD incorporates a universal mounting bracket designed to bolt directly to standard UniStrut. The HVD should be assembled as shown in the drawing and with reference to the installation pictures shown. It should be installed on a securely mounted section of horizontal UniStrut or similar material, such that the retractable target can be lowered and rotated under the ultrasonic sensor without interference from the surrounding channel or chamber.

The HVD should be positioned upstream of the flume or weir at a position as recommended in the relevant BS or ISO standard for the primary measuring device. The target plate shaft is provided with a selection of holes to accept a dowel pin to enable the optimum reference height to be set with relation to the invert level of the flume or vertex of the weir. After final assembly and when the structure is fully tightened and aligned, the exact reference height should be determined using a suitable optical or laser level.

The target plate should be set to represent a level reading of 75% to 90% of the maximum span. This enables the target to be lowered and rotated under the sensor and to simulate a “live” flow reading within the normal measurement span.

Ultrasonic sensor mounting height

To minimise the measurement uncertainty, it is recommended to mount the sensor as low as possible.
As a typical guide, this should be the maximum gauged head + dead-band + 50mm.
Note: Allow a minimum of 50mm above the top water level.

e.g. Hmax = 350mm Dead-band = 300mm
Ultrasonic sensor height = 350 + 300 + 50 = 700mm
Recommended target height above zero datum = 0.9 x Hmax = 0.9 x 350mm = 315mm

Order code

Code	Description
MSP-HVD	MSP head verification device

©2009 Emerson Process Management. All rights reserved.

The Emerson logo is a trade mark and service mark of Emerson Electric Co.
Mobrey is a registered trademark of Mobrey Ltd. All other marks are the property of their respective owners
We reserve the right to modify or improve the designs or specifications of product and services at any time without notice.

International:
Emerson Process Management
Mobrey Ltd.
158 Edinburgh Avenue, Slough,
Berks UK SL1 4UE
T +44 (0)1753 756600
F +44 (0)1753 823589
www.mobrey.com

Americas:
Emerson Process Management
Rosemount Measurement
8200 Market Boulevard
Chanhassen, MN USA 55317
T (US) (800) 999-9307
T (International) 952) 906-8888
F (952) 949-7001

EMERSON
Process Management